Radial ground states and singular ground states for a spatial dependent p-Laplace equation

Matteo Franca*

December 5, 2008

Abstract

We consider the following equation

$$\Delta_p u(\mathbf{x}) + f(u, |\mathbf{x}|) = 0,$$

where $\mathbf{x} \in \mathbb{R}^n$, $n > p > 1$, and we assume that f is negative for $|u|$ small and $\lim_{u\to+\infty} \frac{f(u,0)}{u|u|^{q-2}} = a_0 > 0$ where $p_* = \frac{p(n-1)}{n-p} < q < p^* = \frac{np}{n-p}$, so $f(u, 0)$ is subcritical and superlinear at infinity.

In this paper we generalize the results obtained in a previous paper, [11], where the prototypical nonlinearity

$$f(u, r) = -k_1(r)u|u|^{q_1-2} + k_2(r)u|u|^{q_2-2},$$

is considered, with the further restriction $1 < p \leq 2$ and $q_1 > 2$. We manage to prove the existence of a radial ground state, for more generic functions $f(u, |\mathbf{x}|)$ and also in the case $p > 2$ and $1 < q_1 < 2$. We also prove the existence of uncountably many radial singular ground states under very weak hypotheses.

The proofs combine an energy analysis and a shooting method. We also make use of Wazewski's principle to overcome some difficulties deriving from the lack of regularity.

Key Words: p-laplace equations, radial solution, regular/singular ground state, Fowler inversion, Wazewski's principle.
MR (2000) Suject Classification: 35j70, 35j10, 37d10

*Dipartimento di Scienze Matematiche, Università di Ancona, Via Brecce Bianche 1, 60131 Ancona - Italy. Partially supported by G.N.A.M.P.A. - INdAM (Italy)

1 Introduction

The aim of this paper, along with [11], is to investigate positive radial solutions for equation of this type

$$\operatorname{div}(\nabla u|\nabla u|^{p-2}) + f(u, |x|) = 0 \tag{1.1}$$

where $\mathbf{x} \in \mathbb{R}^n$, and $f(u, |\mathbf{x}|)$ is negative as $u \to 0$ and positive and subcritical with respect to the Sobolev critical exponent as $u \to \infty$.

Since we just consider radially symmetric solutions we will in fact study the following singular O.D.E. where we have set $r = |\mathbf{x}|$:

$$(u'|u'|^{p-2})' + \frac{n-1}{r}u'|u'|^{p-2} + f(u, r) = 0. \tag{1.2}$$

Here and later we denote by $'$ the derivative with respect to r. The prototypical non-linearity f we are considering is

$$f(u, r) = -k_1(r)u|u|^{q_1-2} + k_2(r)u|u|^{q_2-2}, \tag{1.3}$$

where k_1 and k_2 are positive functions which are locally Lipschitz continuous and $q_1 < q_2 < p^*$, where p^* is the Sobolev critical exponent. We recall that p^* is usually defined just when $n > p$ and we have $p^* = \frac{np}{n-p}$; when $n \leq p$ we set $p^* = \infty$. We use the following notation: we call classic a solution of (1.2) satisfying

$$u(0) = d > 0 \qquad \text{and} \qquad u'(0) = 0, \tag{1.4}$$

and sometimes we denote by $u(d, r)$ such a solution to stress the dependence on the initial condition; we call singular a solution $u(r)$ such that $\lim_{r\to 0} u(r) = \infty$.

In particular we focus our attention on the problem of existence of ground states (G.S.), of singular ground states (S.G.S.) and of crossing solutions. By G.S. we mean a nonnegative classic solution $u(\mathbf{x})$ defined in the whole of $\mathbb{R}^n$ such that $\lim_{|\mathbf{x}|\to\infty} u(\mathbf{x}) = 0$. A S.G.S of equation (1.1) is a singular nonnegative solution $v(\mathbf{x})$ such that

$$\lim_{|\mathbf{x}|\to 0} v(\mathbf{x}) = +\infty \quad \text{and} \quad \lim_{|\mathbf{x}|\to +\infty} v(\mathbf{x}) = 0.$$

Crossing solutions are radial solutions $u(r)$ such that $u(r) > 0$ for any $0 \leq r < R$ and $u(R) = 0$ for some $R > 0$, so they can be considered as solutions of the Dirichlet problem in the ball of radius R. Here and later we write $u(r)$ for $u(\mathbf{x})$ when $|\mathbf{x}| = r$ and u is radially symmetric.

In our equation an important role is played also by the critical value p_*, which is the largest q such that the trace operator $\gamma : W^{1,p}(\Omega) \to L^q(\partial\Omega)$ is continuous; i.e. $p_* := \frac{p(n-1)}{n-p}$ when $n > p$; when $n \leq p$ we set $p_* = \infty$. We will always assume the following:

F0 $\begin{cases} \bullet \text{ The function } f(u,r) \text{ is continuous in } \mathbb{R}^2\text{, Lipschitz continuous in} \\ \text{both the variables for } u, r > 0. \\ \bullet\ f(-u,r) = -f(u,r) \text{ for any } r \geq 0\text{, and for any } u \in \mathbb{R} \\ \bullet \text{ There are } \nu > 0 \text{ and } p < q < p^* \text{ such that, for any } 0 \leq r \leq \nu \\ \lim_{u\to\infty} \frac{f(u,r)}{|u|^{q-1}} = a_0(r) > 0 \text{ and } a_0(r) \text{ is continuous.} \end{cases}$

We have implicitly assumed that $\lim_{r\to 0} f(u,r)$ is bounded. In fact this Hypothesis is not really restrictive since, even when $\lim_{r\to 0} f(u,r) = +\infty$ for any $u > 0$, usually it is possible to reduce the problem to an equivalent one in which $\lim_{r\to 0} f(u,r)$ is bounded, see appendix B and in particular Remark 5.1. Consider a non-linearity $f(u,r)$ of type (1.3) and assume that the functions $k_i(r)$ are continuous for $r \geq 0$ and Lipschitz continuous for $r > 0$; then Hyp. F0 is satisfied and $a_0(r) = k_2(r)$. Let us denote by $F(u,r) = \int_0^u f(s,r)ds$; now we are ready to state the other main hypotheses which will be used in the paper:

F1 There are positive constants $A \geq a > 0$ and $\rho > 0$ such that

$$\begin{array}{lll} f(u,r) < 0 & & \text{for } r > \rho \text{ and } 0 < u < a \\ F(A,0) = 0 & \text{and} \quad f(u,0) > 0 & \text{for} \quad u \geq A. \end{array}$$

F2 $f(u,0) \geq f(u,r)$ for any $0 < u \leq A$ and any $r \geq 0$.

F3 The exponent q in Hyp. F0 is such that $q > p_*$.

1.1 Remark. Note that from the third point of F0 it follows that there exists $B \geq A$ such that $f(u,r) > 0$ for $u > B$ and $0 \leq r \leq \nu$.

Consider (1.2) where f is as in (1.3) and the functions $-k_1(r)$ and $k_2(r)$ are bounded and have their maximum at $r = 0$. Then Hyp. F0, F1 and F2 are satisfied. Moreover consider a function

$$f(u,r) = \sum_{i=1}^{s-1} k_i(r)u|u|^{q_i-2} + k_s(r)u|u|^{q_s-2},$$

where $q_j < q_{j+1} < p^*$. Assume that the functions $k_j(r)$ are bounded and have their maximum in $r = 0$, for $j = 1, \ldots, s$, and that $k_1(0) < 0 < k_s(0)$; then Hyp. F0, F1 and F2 are satisfied. These Hyp. are satisfied also if we consider a function $f(u,r) = k_1(r)\sin(u) + k_2(r)u|u|^{q-2}$, where again $q < p^*$, the functions $k_i(r)$ are bounded and have their maximum for $r = 0$ and $k_1(0) < 0 < k_2(0)$.

In recent years equation of these type have been subject to rather deep investigations. The starting point was the classic Laplacian case, that is

$p = 2$. Gidas, Ni and Nirenberg, in their seminal paper [15], proved the existence and the uniqueness of a radial G.S. for (1.1), (1.3), assuming that $f(u, r)$ is non increasing in the variable r. They also proved that, in such a case, all the G.S. have to be radial. Their proofs rely on the moving plane method.

Later on these results were partially extended to the case $p \neq 2$ and to more generic differential operators. Franchi, Lanconelli and Serrin proved the existence and the uniqueness of a radial G.S. in the spatial independent case, assuming that f is "sub-halflinear" as $u \to 0$, that is $|f(u, r)|/|u|^{p-1} \to \infty$ as $u \to 0$. Such a restriction was removed in [14]. Using the moving plane technique Damascelli, Pacella and Ramaswami in [4] proved that G.S. and solutions of the Dirichlet problem in balls have to be radially symmetric whenever $1 < p \leq 2$, for the spatially independent equation (1.1), (1.3). These results have been extended by Serrin and Zhou in [22] to the $p > 2$ case and to more generic non-linearities. These results obviously give more relevance to the problem of existence of radial solutions.

In [11] we made a first attempt to consider the spatial dependent problem (1.2), (1.3), assuming $1 < p \leq 2$. In particular we managed to prove the existence of a G.S. It is known that such a solution is unique for a nonlinearity f of type (1.3), at least in the spatial independent case, see [12], [13], [21]. Most probably the same result holds also when $f(u, r)$ is monotone decreasing in r (this is the case when $p = 2$).

However we think that it is possible to produce multiple G.S. when the monotonicity Hypothesis is dropped and with a clever choice of the functions k_i. In [11] we also proved the existence of uncountably many S.G.S., with a further restriction on the range of the parameter: $q_1 > p_*$. As far as we are aware this latter result is new even for the spatial independent case, and for the classical Laplace operator (that is $p = 2$). The proofs rely on a change of variables of Fowler type and on a shooting argument, combined with Pohozaev and energy estimates. In fact we realized that some of the assumptions are needed just to ensure enough regularity in order to apply invariant manifold theory. The introduction of these kind of dynamical system methods in the study of radial solutions of semi and quasi-linear elliptic equations is due to Johnson, Pan and Yi and then later followed by other authors as Battelli, Bamon, Flores, and Del Pino see [1, 5, 6, 9, 16, 18]. In fact it gives a not enough exploited point of view on the problem which is very useful in analyzing singular solutions and in proving asymptotic estimates.

The main results are contained in Theorem 2.8, in which we prove the existence of a ground state, and in Theorem 2.10, in which we prove the existence of uncountably many singular ground states. The aim of this paper is to extend the results of [11] to more generic non-linearities and to the case

$p > 2$. Furthermore we manage to prove some asymptotic estimates that, in some cases, are sharper than the known ones, even in the spatial independent setting, as far as we are aware. Another important contribution is in the fact that, when f is as in (1.3), we have managed to remove the restriction on the parameter q_1 in the results concerning singular ground states (and this result is new even for $p = 2$ and f spatial independent).

In the proofs we follow the ideas of [11], removing the unnecessary Hypotheses and adapting the analysis to a less regular setting in which local uniqueness of the solutions is lost. This fact causes several technical difficulties which are overcome through a new method introduced in [10], relying on Wazeski's principle.

The paper is structured as follows: in chapter 2 we give some preliminary results and we state the main theorems; in chapter 3 we prove the existence of a monotone decreasing ground state under Hyp. F0, F1 and F2; in chapter 4 we prove the existence of uncountably many S.G.S. assuming that Hyp. F0 and F1 hold; in Appendix A we prove the asymptotic estimates; in Appendix B we show how the results concerning the spatial dependent equation (1.2) can be extended to the following more general family of equation:

$$(h(r)u'|u'|^{p-2})' + \frac{n-1}{r}u'|u'|^{p-2} + f(u,r) = 0, \tag{1.5}$$

which gives the radial solution for the following problem:

$$\operatorname{div}(h(|x|)\nabla u|\nabla u|^{p-2}) + f(u,|x|) = 0. \tag{1.6}$$

We also make use of the concept of natural dimension (borrowed from [13]), which is useful to pass from a problem in which $\lim_{r\to 0} f(u,r) = \infty$ for any $u > 0$ to a problem in which $f(u,r)$ is continuous for $r = 0$.

Recently Calzolari, Filippucci and Pucci in [2] obtained results similar to ours. The proofs are independent (in fact [2] appeared after this paper was submitted) and exploit different techniques. They consider eq. (1.6) assuming that it can be reduced to (1.2) through the change of variables discussed in Appendix B, and that the nonlinearity f obtained in this way is spatial independent, so this is a particular case of the setting considered here. They prove the existence of ground states assuming hypotheses very similar to ours. However they manage to consider also nonlinearities $f(u) = -k_1 u|u|^{q_1-2} + k_2 u|u|^{q_2-2} + k_3 u|u|^{p^*-2}$ where k_i are positive constants and $0 < q_1 < q_2 < p^*$ (so they can allow $q_1 \in (0,1)$ that is f is singular for $u = 0$) which are not covered from our results. Moreover we have to require that the governing term for u large is polynomial, as in the motivating example (1.3), while they just ask it to be subcritical. However they cannot deal

with really spatial dependent f. Another remarkable difference is that they cannot discuss singular ground states (this is one of the main advantage of our method and probably the main contribution of the paper). Furthermore we can give sharper asymptotic estimates.

2 Preliminary results and stating of the Theorems.

We begin by recalling some standard results. When Hyp. F0 and F1 are satisfied equations (1.2), (1.4) admit a unique solution for any $d \geq A$; moreover $u'(r) \leq 0$ for r small, see Lemma 1.1.1 in [12]. Furthermore all these solutions can be continued in

$$J(d) = (0, R_d) = \{r > 0 \mid u'(r) < 0 \text{ and } u(r) > 0\},$$

where R_d can also be infinite, see again [12], for example.

Modifying slightly Lemma 1.1.1 in [12] we can prove the following Lemma:

2.1 Lemma. *Assume that Hyp. F0 and F1 are satisfied and consider a classic solution $u(r)$, then $(u'|u'|^{p-2})'(0) = -\frac{f(u(0),0)}{n}$. Furthermore if $u(r) > B$ (see Remark 1.1) for any $0 < r \leq \nu$ then $u'(r) < 0$ for any $0 < r \leq \nu$.*

Proof. From (1.2) it follows that

$$(u'|u'|^{p-2}(r))' = -f(u,r) + \frac{n-1}{r^n} \int_0^r t^{n-1} f(u(t),t)dt$$

Using De l'Hospital rule we obtain $(u'|u'|^{p-2})'(0) = -\frac{f(u(0),0)}{n}$.

Now consider a solution $u(r)$ such that $u(r) > B$ for any $0 < r \leq \nu$ and assume that there is $0 < R \leq \nu$ such that $u'(R) = 0$. Then $(u'|u'|^{p-2})'(R) = -f(u(R), R) < 0$, therefore $u(R)$ is a local maximum. But $u(0)$ is a local maximum as well, therefore there is $0 < r^* < R$ such that $u(r^*) > B$ is a minimum. From (1.2) we deduce again that $(u'|u'|^{p-2})'(r^*) = -f(u(d, r^*), r^*) < 0$, but this is a contradiction, so the proof of the Lemma follows. □

Note that if $d \geq A$ there exists the limit $\lim_{r \to R_d} u(d; r) = L(d) \geq 0$. Assume that Hypotheses F0 and F1 are satisfied, then we can construct the following set:

$$I^- = \{d \geq A \mid \lim_{r \to R_d} = u'(d, r) < 0 \text{ and } L(d) = 0\}$$

Our strategy is the following: we will see that I^- is open, non-empty and contains an interval which is unbounded. Moreover we will show that $A \notin I^-$,

so there is an interval $(c, \infty) \subset I^-$ such that $c \notin I^-$. Then we will see that $u(c, r)$ is a monotone decreasing ground state. Now we need to introduce the following energy functions:

$$E(u, u') := \frac{p-1}{p}|u'|^p + F(u, 0) \tag{2.1}$$

Differentiating with respect to r we get

$$\frac{d}{dr}E(u(r), u'(r)) := -\frac{n-1}{r}|u'|^p + (f(u, 0) - f(u, r))u'$$

2.2 Lemma. *Assume that Hypotheses F0, F1 and F2 are satisfied, then* $A \notin I^-$.

Proof. We consider the classic solution $u(A, r)$ of (1.2). From Lemma 2.1 we deduce that $u(A, r)$ is non-constant. We recall that $u'(A, r) < 0$ for $r \in J(A)$.

Note that $E(u(A, 0), u'(A, 0)) = F(A, 0) = 0$; from Hyp. F2 we deduce that $E(u(A, r), u'(A, r))$ is monotone decreasing in r, for any $r \in J(A)$, strictly for some r. It follows that $F(L(A), 0) \leq \lim_{r \to R_A} E(u(A, r), u'(A, r)) < 0$, therefore $0 < L(A) < A$. □

We point out that the solutions of (1.2), (1.4) depend continuously on initial data and are locally unique in their respective sets $J(d)$. This can be proved putting together the ideas of Propositions A3 and A4 in [12], with some trivial modification to adapt them to the spatial-dependent problem; see also Proposition 2.6 in [14]. More precisely the following result holds.

2.3 Lemma. *Assume that Hyp. F0 is satisfied. Fix* $d > A$*, then for any* $\delta > 0$ *and* $r_0 \in J(d)$*, there exists* $\epsilon > 0$ *such that if* $|c - d| < \epsilon$*, then* $u(c, r)$ *is defined in* $[0, r_0]$ *and*

$$\sup_{r \in [0, r_0]} (|u(d, r) - u(c, r)| + |u'(d, r) - u'(c, r)|) < \delta.$$

If $f(u, r) > 0$ for any $r \geq 0$ and $u > 0$ we usually have two possible behaviour for positive solutions: a slow decay and a fast decay. However positive solutions $u(r)$ tend to 0 as r tends to $+\infty$. When Hyp. F0, F1 and F2 are satisfied we have again two different asymptotic behaviors: positive solutions may oscillate between two positive values or tend to 0 as r tend to ∞. We give now some Propositions concerning the asymptotic behaviour of positive solutions for r large and in particular of ground states. The proofs are postponed to appendix A.

2.4 Proposition. *Assume that Hyp. F0, F1 and F2 are satisfied and consider a solution $u(r)$ of (1.2) such that $u'(r) \leq 0 \leq u(r)$ for any $r > R$ for a certain $R > 0$, and $\lim_{r\to\infty} u(r) = 0$.*

A *Assume that $\int_0 |F(s,0)|^{-1/p} ds < \infty$. Then the support of $u(r)$ is bounded.*

B *Assume that there are $C > 0$, $\delta > 0$ and $q_1 \geq p$ such that $-f(u,r) < Cu^{q_1-1}$ for any $0 < u < \delta$ and for any $r \geq 0$. Then $u(r) > 0$ for $r > R$ and $0 \leq \lim_{r\to\infty} u(r) r^{\frac{n-p}{p-1}} = \lambda < \infty$.*

Now we give a better estimate of the asymptotic behaviour of strictly positive solutions. As far as we are aware these asymptotic results are more precise than the known ones even in the classical case where f is as in (1.3) with $k_1 \equiv k_2 \equiv 1$. We recall that the following notation is in force: $p_* = \frac{p(n-1)}{n-p}$ when $n > p$, and $p_* = \infty$ whenever $n \leq p$.

2.5 Corollary. *Assume that Hypothesis B of the previous Proposition is satisfied.*

1 *If $q_1 > p_*$, then $\lambda > 0$.*

2 *Assume that $q_1 \leq p_*$, and that there are $\delta > 0$, $c > 0$ and $Q_1 \in (p, q_1]$ such that $-f(u,r) > cu(r)^{Q_1-1}$ for r large and $0 \leq u < \delta$. Then $\lambda = 0$ and $\limsup_{r\to\infty} u(r) r^{-\frac{p}{Q_1-p}} < \infty$. Furthermore if $Q_1 = p_*$ we also have $\limsup_{r\to\infty} u(r) r^{\frac{n-p}{p-1}} |\ln(r)|^{\frac{n-p}{p(p-1)}} < \infty$.*

3 *Assume that the following limit exists is bounded and negative:*

$$\lim_{r\to\infty} \frac{f(ur^{-\frac{p}{Q_1-p}}, r)}{\left|ur^{-\frac{p}{Q_1-p}}\right|^{Q_1-1}} = -k(\infty).$$

If $Q_1 < p_*$, then $\lim_{r\to\infty} u(r) r^{-\frac{p}{Q_1-p}} = P_x > 0$. If $Q_1 = p_*$ then $u(r) r^{\frac{n-p}{p-1}} |\ln(r)|^{\frac{n-p}{p(p-1)}}$ is uniformly positive and bounded for r large.

2.6 Remark. Consider f as in (1.3); assume that $p < q_1 < p_*$, and that the functions $k_i(r)$ are Lipschitz, and that they are bounded as $r \to \infty$.
Then if $q_1 < p$ we are in the Hypotheses of claim A of Proposition 2.4, while if $q_1 \geq p$ Hyp. B is satisfied. Moreover if $q_1 > p_*$, then we are in Hyp. 1 of Corollary 2.5, while if $p < q_1 \leq p_*$ Hyp. 2 of Corollary 2.5 holds. To satisfy Hyp. 3 we need to assume that $p < q_1 < p_*$ and $\lim_{r\to\infty} k_1(r) = k(\infty) > 0$.

For completeness sake we quote also an asymptotic result, proved in [3], concerning the nonlinearity (1.3) when $q_1 = p$.

2.7 Proposition. *Consider (1.2), (1.3) where* $k_1(r) \equiv 1$ *and* $\lim_{r\to\infty} k_2(r) = k_2(\infty) > 0$. *Furthermore assume that there is* $c > 0$ *such that* $k_2(r) > k_2(\infty) - c\exp(-\nu r)$ *where* $\nu > 2/\sqrt[p]{p-1}$. *Then there exists exactly one monotone decreasing ground state* $u(r)$ *and we have that*

$$u(r) r^{\frac{n-1}{p(p-1)}} \exp(r/\sqrt[p]{p-1})$$

is uniformly positive and bounded for r *large.*

Now we can state the main results of the paper.

2.8 Theorem. *Assume that Hyp. F0, F1, F2 are satisfied. Then there exists* $c > A$ *such that* $u(c, r)$ *is a monotone decreasing ground state.*

Using a standard continuity argument we can also prove the following.

2.9 Corollary. *Assume that Hyp. F0, F1, F2 are satisfied. Then* $u(d, r)$ *is a crossing solution for any* $d > c$ *whose first zero is* $R_1(d)$*; moreover* $\lim_{d\to\infty} R_1(d) = 0$. *Furthermore assume that we are in the Hypotheses of Proposition 2.4 B, then we also have that* $\lim_{d\to c} R_1(d) = \infty$. *Therefore the Dirichlet problem in the ball of radius* $R > 0$ *for equation (1.2) admits at least one solution for any* $R > 0$.

2.10 Theorem. *Assume that Hyp. F0, F1 and F3 are satisfied, then (1.2) admits uncountably many singular ground states.*

2.11 Remark. When $q \geq p$ ground states and singular ground states are positive for any $r > 0$, while if $q < p$ their support is bounded.

3 Dynamical analysis

3.1 Fowler transformation and autonomous system

Following [11], we introduce a dynamical system through the following change of coordinates, to prove that I^- contains an unbounded interval.

$$\begin{gathered} \alpha_l = \tfrac{p}{l-p}, \quad \beta_l = \tfrac{p(l-1)}{l-p} - 1, \quad \gamma_l = \beta_l - (n-1), \quad l > p \\ x_l = u(r) r^{\alpha_l} \quad y_l = u'(r)|u'(r)|^{p-2} r^{\beta_l} \quad r = e^t \end{gathered} \tag{3.1}$$

This is a generalization of the Fowler transformation which works when $p = 2$. Using this change of coordinates we pass from (1.2) to the following system.

$$\begin{pmatrix} \dot{x}_l \\ \dot{y}_l \end{pmatrix} = \begin{pmatrix} \alpha_l & 0 \\ 0 & \gamma_l \end{pmatrix} \begin{pmatrix} x_l \\ y_l \end{pmatrix} + \begin{pmatrix} y_l |y_l|^{\frac{2-p}{p-1}} \\ -g(x_l, t) \end{pmatrix} \tag{3.2}$$

Here and later "$\cdot$" stands for $\frac{d}{dt}$.

$$g(x_l,t) := f(x_l \exp(-\alpha_l t), \exp(t))e^{\alpha_l(l-1)t}. \tag{3.3}$$

When Hyp. F0 is satisfied, for any fixed $x_q \in \mathbb{R}$ we have $\lim_{t\to-\infty} g(x_q,t) = a_0 x_q|x_q|^{q-2}$, where $a_0(0) = a_0$. Sometimes it will be useful to embed (1.2) in the following one parameter family of equations where a translation parameter has been added.

$$\begin{pmatrix} \dot{x}_l \\ \dot{y}_l \end{pmatrix} = \begin{pmatrix} \alpha_l & 0 \\ 0 & \gamma_l \end{pmatrix} \begin{pmatrix} x_l \\ y_l \end{pmatrix} + \begin{pmatrix} y_l|y_l|^{\frac{2-p}{p-1}} \\ -g(x_l, t+\tau) \end{pmatrix} \tag{3.4}$$

We give now some notation which will be in force throughout the whole paper. Let $\mathbf{P}$,$\mathbf{Q}\in \mathbb{R}^2$, $\mathbf{P}$,$\neq\mathbf{Q}$; we denote by $\overline{\mathbf{QP}}$ the rectilinear segment between $\mathbf{P}$ and $\mathbf{Q}$. We denote by $\mathbf{X}(\mathbf{Q},t)$ and by $\mathbf{X}^\tau(\mathbf{Q},t)$ respectively the trajectory of (3.2) and of (3.4) which pass through $\mathbf{Q}$ at $t = 0$. Therefore $\mathbf{X}(\mathbf{Q},t) = \mathbf{X}^0(\mathbf{Q},t)$. Note that if $\mathbf{X}(\mathbf{Q},\tau) = \mathbf{P} \in \mathbb{R}^2$, then $\mathbf{X}^\tau(\mathbf{P},t) = \mathbf{X}(\mathbf{Q},t+\tau)$, for any $t \in \mathbb{R}$. We denote by $\mathbb{R}^2_+$ the semi-plane where $x \geq 0$.

Our idea is to compare our problem with other simpler ones in order to find upper and lower bound for the solutions. We consider at first the case where $f(u,r) = cu|u|^{q-2}$, where $c > 0$ is a constant. Using (3.1) with $l = q$, we have that $g(x,t) = cx|x|^{q-2}$, so we pass from the singular ODE (1.2) to the following autonomous dynamical system.

$$\begin{pmatrix} \dot{x}_q \\ \dot{y}_q \end{pmatrix} = \begin{pmatrix} \alpha_q & 0 \\ 0 & \gamma_q \end{pmatrix} \begin{pmatrix} x_q \\ y_q \end{pmatrix} + \begin{pmatrix} y_q|y_q|^{\frac{2-p}{p-1}} \\ -cx_q|x_q|^{q-1} \end{pmatrix} \tag{3.5}$$

Note that system (3.5) is $\mathcal{C}^1$ if and only if $q \geq 2$ and $1 < p \leq 2$. If such hypotheses are not satisfied the system is just Holder continuous on the coordinate axes, therefore local uniqueness of the solutions is not a priori ensured.

In this section we give a dynamical interpretation of some well known facts concerning Eq. (1.2) in the case $f(u,r) = cu|u|^{q-2}$. So we just analyze Eq. (3.5) and we will always set $l = q$ in (3.1); hence we will leave the subscript unsaid to simplify the notation. We always assume $q > p$, thus $\alpha > 0$; note also that $\gamma < 0$ if and only if $q > p_*$, and $\alpha+\gamma > 0$ if $p < q < p^*$. When $q > p_*$ (3.5) admits 3 critical points which are the origin $\mathbf{O}= (0,0)$, $\mathbf{P}= (P_x, P_y)$, and $-\mathbf{P}$. From a straightforward computation we get $P_x = |\gamma\alpha^{p-1}|^{\frac{1}{q-p}}$ and $P_y = -|\gamma\alpha^{q-1}|^{\frac{p-1}{q-p}}$ thus $P_y < 0 < P_x$.

In the first part of this subsection we assume $q \geq 2$ and $1 < p \leq 2$, so (3.5) is Lipschitz. The origin is a saddle point whenever $q > p_*$, and

it admits a stable manifold W^s and an unstable manifold W^u. Whenever $p_* < q < p^*$ the critical points $\mathbf{P}$ and $-\mathbf{P}$ admit a two dimensional unstable manifold. If we rewrite (3.5) in the compact form $\dot{\mathbf{x}}(t) = \mathbf{f}(\mathbf{x})$, we find that $\mathrm{div}(\mathbf{f}) = \alpha+\gamma > 0$. Hence, using the Poincare-Bendixson criterion, we deduce that there are no periodic trajectories. If the system is just Holder continuous on the coordinate axes the result still holds on each open quadrant, then it can be easily extended to the whole $\mathbb{R}^2$.

We begin by stressing some elementary correspondences between systems of type (3.5) and equation (1.2) with $f(u,r) = cu|u|^{q-2}$. First of all observe that a positive solution $u(r)$ of (1.2) corresponds to a trajectory $\mathbf{x}(t) = (x(t), y(t))$ of (3.2) such that $x(t) > 0$. Furthermore $u'(r) < 0$ is equivalent to $y(t) < 0$ for t finite. Since we are just interested in positive solutions and the prototypical problem is symmetric with respect to the origin, we will restrict our attention to the semi-plane $\mathbb{R}^2_+ := \{(x,y) \mid x \geq 0\}$. We will always commit the following abuse of notation: we call unstable manifold W^u (respectively stable manifold W^s), the branch of the invariant manifold which departs from the origin and enters in $\mathbb{R}^2_+$.

3.1 Remark. There is a bijective correspondence between trajectories $\mathbf{x}(\mathbf{Q}, t)$ departing from $\mathbf{Q} \in W^u$ at $t = 0$ of (3.5), and the classic solutions $u(r)$ of (1.2). Analogously there is a bijective correspondence between trajectories $\mathbf{x}(\mathbf{Q}, t)$ departing from $\mathbf{Q} \in W^s$ at $t = 0$ of (3.5) and solutions $u(r)$ of (1.2) having fast decay, that is $u(r) > 0$ for r large and $\lim_{r\to\infty} u(r) r^{\frac{n-p}{p-1}} = \lambda > 0$.

This is a dynamical interpretation of some well known results. The validity of this asymptotic estimate relies on some integral manipulations, see [8] and [18] for a detailed proof.

To analyze equation (1.2) with this strong assumption is enough to use the Pohozaev identity, see [12, 14]. Namely if $u(r)$ is a classic solution we can define the following Pohozaev function

$$P_u(r) = \frac{n-p}{p} r^{n-1} u(r) u'(r) |u'(r)|^{p-2} + r^n \frac{p-1}{p} |u'(r)|^p + \frac{c}{p} r^n \frac{|u(s)|^q}{q}.$$

It can be proved easily that the following useful equality holds

$$\frac{\partial}{\partial r} P_u(r) = c \frac{(n-p)(q-p^*)}{pq} r^n |u|^q.$$

Therefore $P_u(r)$ is monotone increasing if $p < q < p^*$, it is constant if $q = p^*$, and it is monotone decreasing if $q > p^*$. Then we go back to system (3.5) and we introduce the following function:

$$H(x,y) = P_u(e^t) e^{(\alpha+\gamma)t} = \left(\frac{n-p}{p} xy + \frac{p-1}{p} |y|^{\frac{p}{p-1}} + c \frac{|x|^q}{q}\right).$$

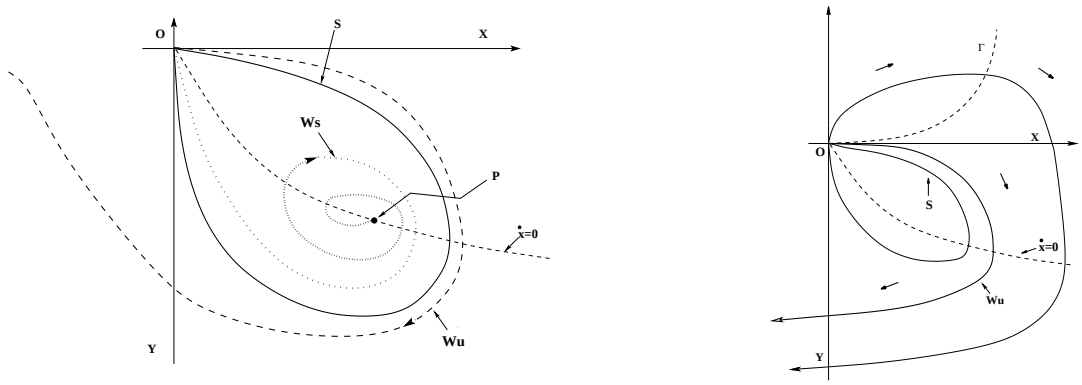

Figure 1: A sketch of the phase portrait for the autonomous system (3.5) when $c > 0$, $1 < p \leq 2$ and $q \geq 2$. The figure 1A shows the stable and the unstable manifold W^s and W^u when $p_* < q < p^*$ while 1B shows them in the case $q \leq p_*$, including the case $p_* = \infty$ (that is $n \leq p$). The solid curve S indicates the set $\{(x, y) \mid x \geq 0\ H(x, y) = 0\}$.

The level set of this functions are closed bounded curves and the set $\{(x, y) \mid H(x, y) = 0\}$ contains the origin. Consider the solution $(x(t), y(t))$ corresponding to a classic solution $u(r)$. Since for any t, $H(x(t), y(t))$ is negative if $q > p^*$, it is positive if $q < p^*$ and it is 0 if $q = p^*$, we can give a sketch of W^u and W^s as in Figure 1, see [7] and [8] for details.

We collect now some known results which follows from an analysis of the picture and from Remark 3.1.

3.2 Remark. When $p < q < p^*$ all the classic solutions $u(d, r)$ of (1.2) are crossing solutions. Moreover there is a monotone increasing sequence of values $R_k(d) \to \infty$ such that $u(d, R_k(d)) = 0$.

If we assume $p < q < p_*$ then Eq. (1.2) admits uncountably many S.G.S. with fast decay $v(r)$, that is $v(r)r^{\alpha_q} = P_x > 0$ as $r \to 0$, $v(r) > 0$ for any $r > 0$, and $\lim_{r\to\infty} v(r)r^{\frac{n-p}{p-1}} = \lambda > 0$. Furthermore there is exactly one S.G.S. with slow decay $v(r) = P_x r^{-\alpha_q}$.

3.3 Remark. Fix $\mathbf{Q} \in W^u$ and consider two solutions $u(a, r)$ and $u(b, r)$ of (1.2), corresponding respectively to $\mathbf{X}(\mathbf{Q}, t)$ and $\mathbf{X}^\tau(\mathbf{Q}, t)$. Since (3.5) is invariant for translations in t we have $\mathbf{X}(\mathbf{Q}, t) \equiv \mathbf{X}^\tau(\mathbf{Q}, t)$ for any $t \in \mathbb{R}$. So if $b = a\exp(\alpha\tau)$ then $u(b, r) = u(a, r\exp(\tau))\exp(\alpha\tau)$. It follows that $R_1(d) \to 0$ as $d \to \infty$ and $R_1(d) \to \infty$ as $d \to 0$.

Furthermore if $\mathbf{X}^\tau(t) = (X^\tau(t), Y^\tau(t))$ is a trajectory of (3.5) with $c = 1$, then $\mathbf{X}^\tau_k(t) = (\frac{X^\tau(t)}{k^{1/(q-p)}}, \frac{Y^\tau(t)}{k^{(q-p)/(q-p)}})$ is a trajectory of (3.5) with $c = k$.

We want to analyze now the phase portrait of system (3.5) removing the restriction $1 < p \leq 2$ and $q \geq 2$. In such a case the system is just Holder

continuous on the coordinate axes, thus local uniqueness of the solutions and continuous dependence on initial data is not a priori ensured. Our first purpose is to construct an unstable set, but we cannot anymore rely on standard invariant manifold theory, due to the lack of regularity of the equation. To face this difficulty it is useful to put the problem in a abstract framework.

Consider the equation

$$\dot{\mathbf{x}} = \mathbf{f}(\mathbf{x}, t), \tag{3.6}$$

where $\mathbf{x} \in \mathbb{R}^2$, $t \in \mathbb{R}$. We embed the equation in the following one parameter family of equations obtained adding the translation parameter $\tau \in \mathbb{R}$:

$$\dot{\mathbf{x}} = \mathbf{f}(\mathbf{x}, t + \tau). \tag{3.7}$$

First we need the following Lemma proved in [20].

3.4 Lemma. *Let $\mathcal{R} \subset \mathbb{R}^2$ be a closed set homeomorphic to a full triangle. We call the vertices $\boldsymbol{O}$, $\boldsymbol{A}$ and $\boldsymbol{B}$ and $\bar{o}$, $\bar{a}$, $\bar{b}$ the edges which are opposite to the respective vertex. Let $\mathcal{S} \subset \mathcal{R}$ be a closed set such that $\sigma \cap \mathcal{S} \neq \emptyset$, for any path $\sigma \subset \mathcal{R}$ joining $\bar{a}$ with $\bar{b}$. Then $\mathcal{S}$ contains a closed connected set which contains $\boldsymbol{O}$ and at least one point of o.*

We want to apply Lemma 3.4, to construct a stable and an unstable set for our equation.

3.5 Lemma. *Consider equation (3.6) and assume that $\boldsymbol{f}$ is continuous in both the variables and bounded, and that it is locally Lipschitz continuous for any t and any $\boldsymbol{x} \in \mathbb{R}^2 \setminus \{\boldsymbol{O}\}$. Consider a closed set $\mathcal{R}$ defined as in Lemma 3.4 with the same notation for edges and vertices. Assume that there are no invariant sets in the interior of $\mathcal{R}$. We denote by $a = \bar{a} \setminus \{\boldsymbol{O}\}$, by $b = \bar{b} \setminus \{\boldsymbol{O}\}$ and by $o = \bar{o} \setminus \{\boldsymbol{A}, \boldsymbol{B}\}$.*

Assume that the flow on o points towards the exterior of $\mathcal{R}$, while on a and on b it points towards the interior of $\mathcal{R}$, for any $t < M$, for a certain $M \in \mathbb{R}$. Then, for any $\tau < M$, there is a closed connected set $W^u(\tau)$ joining $\boldsymbol{O}$ and a point $\boldsymbol{Q}^u(\tau) \in o$ defined as follows:

$$\begin{aligned} W^u(\tau) := \{ & \boldsymbol{Q} \in \mathcal{R} \mid \exists T \geq -\infty : \boldsymbol{x}^\tau(\boldsymbol{Q}, t) \in \mathcal{R} \text{ for } T < t \leq 0 \text{ and} \\ & \lim_{t \to T^-} \boldsymbol{x}^\tau(\boldsymbol{Q}, t) = \boldsymbol{O} \}. \end{aligned}$$

Analogously assume that the flow on o points towards the interior of $\mathcal{R}$, while on a and on b it points towards the exterior of $\mathcal{R}$ for any $t > N$ for a certain $N \in \mathbb{R}$. Then, for any $\tau > N$, there is a closed connected set $W^s(\tau)$ joining $\boldsymbol{O}$ and a point $\boldsymbol{Q}^s(\tau) \in o$ defined as follows:

$$\begin{aligned} W^s(\tau) := \{ & \boldsymbol{Q} \in \mathcal{R} \mid \exists T \leq \infty : \boldsymbol{x}^\tau(\boldsymbol{Q}, t) \in \mathcal{R} \text{ for } 0 \leq t < T \text{ and} \\ & \lim_{t \to T^+} \boldsymbol{x}^\tau(\boldsymbol{Q}, t) = \boldsymbol{O} \}. \end{aligned}$$

Note that $\mathbf{f}(\mathbf{x}, t)$ need not to be Lipschitz on $\mathbf{O}$ therefore a priori we may lose local uniqueness of the solution passing trough the origin.

Proof. We just sketch the proof: see [10] for more details. We want to apply Lemma 3.4, therefore consider a continuous path $\sigma : [0, 1] \to \mathbb{R}$ such that $\sigma(0) \in a$ and $\sigma(1) \in b$. Fix $\tau < M$; we want to prove that there is $s \in (0, 1)$ such that $\sigma(s) \in W^u(\tau)$. Consider a point $\mathbf{Q} \in \mathcal{R} \setminus W^u(\tau)$. Since in the interior of $\mathcal{R}$ there are no invariant sets, we can find $T(\mathbf{Q}) \leq 0$ such that $\mathbf{x}^\tau(\mathbf{Q}, t) \in \mathcal{R}$ for any $T(\mathbf{Q}) < t < 0$ and $\mathbf{x}^\tau(\mathbf{Q}, T(\mathbf{Q})) \in a \cup b$. Let us define the following subset of $\mathcal{R}$

$$\bar{\alpha} := \{\mathbf{Q} \in \mathcal{R} \setminus \{\mathbf{O}\} \mid \mathbf{x}^\tau(\mathbf{Q}, T(\mathbf{Q})) \in a\}$$
$$\bar{\beta} := \{\mathbf{Q} \in \mathcal{R} \setminus \{\mathbf{O}\} \mid \mathbf{x}^\tau(\mathbf{Q}, T(\mathbf{Q})) \in b\}$$

Using the continuity of the flow we can prove that $\bar{\alpha}$ and $\bar{\beta}$ are open in $\mathcal{R}$. Then we can define the set

$$\alpha := \{s \in [0, 1] \mid \sigma(s) \in \bar{\alpha}\} \qquad \beta := \{s \in [0, 1] \mid \sigma(s) \in \bar{\beta}\}$$

From the continuity of σ we deduce that these sets are open in $[0, 1]$. Furthermore they are both nonempty, since $0 \in \alpha$ and $1 \in \beta$, so they disconnect $[0, 1]$. Thus there is $s \in (0, 1)$ such that $\sigma(s) \in W^u(\tau)$. Therefore we can apply Lemma 3.4 and conclude that $W^u(\tau)$ is a closed connected subset of $\mathcal{R}$ which joins $\mathbf{O}$ and o. Reasoning in the same way we can prove the claim concerning $W^s(\tau)$. □

Using the flow we can construct an unstable and a stable set $W^{u,s}(\tau)$ for any τ, as follows: fix $\tau^u < M$ and $\tau^s > N$, then we give the following definitions:

$$W^u(\tau) = \{\mathbf{P} = \mathbf{x}^{\tau^u}(\mathbf{Q}, \tau - \tau^u) \mid \mathbf{Q} \in W^u(\tau^u)\}$$
$$W^s(\tau) = \{\mathbf{P} = \mathbf{x}^{\tau^s}(\mathbf{Q}, \tau - \tau^s) \mid \mathbf{Q} \in W^s(\tau^s)\}.$$

Note that if $\mathbf{Q} \in W^u(\tau)$ then there is T such that $\lim_{t \to T^+} \mathbf{x}^\tau(\mathbf{Q}, t) = \mathbf{O}$, while if it is in $W^s(\tau)$ there is T such that $\lim_{t \to T^-} \mathbf{x}^\tau(\mathbf{Q}, t) = \mathbf{O}$. However if $\tau > M$ we cannot anymore say that $W^u(\tau) \subset \mathcal{R}$ and if $\tau < N$ we cannot say that $W^s(\tau) \subset \mathcal{R}$. Using the flow we can also construct global stable and unstable sets.

It can also be proved that the sets $W^{u,s}(\tau)$ vary continuously with respect to τ. More precisely, given two compact sets $X, Y \subset \mathbb{R}^2$ we define the Hausdorff distance

$$D(X, Y) := \max_{x \in X} \min_{y \in Y} |\mathbf{y} - \mathbf{x}|.$$

We claim that $D(\tilde{W}^u(\tau), \tilde{W}^u(\tau+\epsilon)) \to 0$ as $\epsilon \to 0$. A proof of this fact can be find in [10]; we will not repeat it here since we will not actually use this result in this paper.

If systems (3.6) and (3.7) are $\mathcal{C}^1$ and uniformly continuous in the t variable, then it can be proved that $W^{u,s}(\tau)$ are $\mathcal{C}^1$ manifolds, see [17] and [11].

Now we apply Lemma 3.5 to construct a stable and an unstable set for the autonomous equation (3.5), when either $1 < q < 2$ or $p > 2$. Note that the flow on the x positive semi-axis points towards the 4th quadrant. Thus we can find a regular function $L : \mathbb{R}_0^+ \to \mathbb{R}_0^-$ such that $L(0) = 0$ and which satisfies the following property. Consider the set $\partial S = \{(x, L(x)) \mid 0 < x < P_x/2\}$ and the set

$$S = \{(x, y) \mid 0 < x < P_x/2 \text{ and } L(x) < y < 0\}.$$

We choose L so that the flow of (3.5) on ∂S points towards the exterior of S.

Let us denote by $\mathbf{Q}_1$ the point $(P_x/2, L(P_x/2))$ and by $\mathbf{Q}_2$ the point of intersection between the isocline $\dot{x} = 0$ and the line $x = P_x/2$. Let us call C the open segment of the isocline $\dot{x} = 0$ between the origin and $\mathbf{Q}_2$. Note that the flow of (3.5) on C points upwards (here and later we think of the x axis as horizontal and of the y axis as vertical). Consider now the set E enclosed by ∂S, C and $\overline{\mathbf{Q}_1\ \mathbf{Q}_2}$. Note that the flow on ∂S and C points towards the interior of E, for any t. Therefore using Lemma 3.5 we know that there is at least one point $\mathbf{Q} \in \overline{\mathbf{Q}_1\ \mathbf{Q}_2}$ and a value $T \geq -\infty$, such that $\mathbf{x}(\mathbf{Q}, t) \in E$ for any $T < t < 0$, and $\lim_{t\to T} \mathbf{x}(\mathbf{Q}, t) = (0, 0)$. We claim that $T = -\infty$. In fact assume for contradiction that $T > -\infty$, then $R = e^T > 0$. Consider the solution $u(r)$ of (1.2) corresponding to $\mathbf{x}(\mathbf{Q}, t)$. It follows that $u'(r) < 0 < u(r)$ for r in a right neighborhood of R and $u(R) = 0$, but this is a contradiction, so the claim is proved.

Let us define $W^u := \{\mathbf{x}(\mathbf{Q}, t) \mid t \in \mathbb{R}\}$. Note that W^u is a one-dimensional manifold. It is well known that, if $u(r)$ is a solution of (1.2) such that $u(r) > 0$ for r small, then either $u(0) = d < \infty$ for a certain $d > 0$ (classic solution), or $\lim_{r\to\infty} u(r)r^\alpha = P_x$ (singular solution). Furthermore the solution of the Cauchy problem (1.2) with $u(0) = d$ and $u'(0) = 0$ is unique. Using the t-invariance of the system it can be seen easily that each classic solution corresponds to a trajectory $\mathbf{x}(\mathbf{Q}, t)$ of (3.5) such that $\mathbf{Q} \in W^u$ and viceversa. Therefore we deduce that $W^u(\tau) = W^u$ for any τ and that $W^u(\tau)$ is a one-dimensional manifold. Recall that, if (3.5) is $\mathcal{C}^1$ (that is $1 < p \leq 2$ and $q \geq 2$), this result follows directly from invariant manifold theory.

Now assume that $q > p_*$: this condition guarantees that $\gamma < 0$ and the existence of the critical point $\mathbf{P}$. It is well known that a solution $u(r)$ such

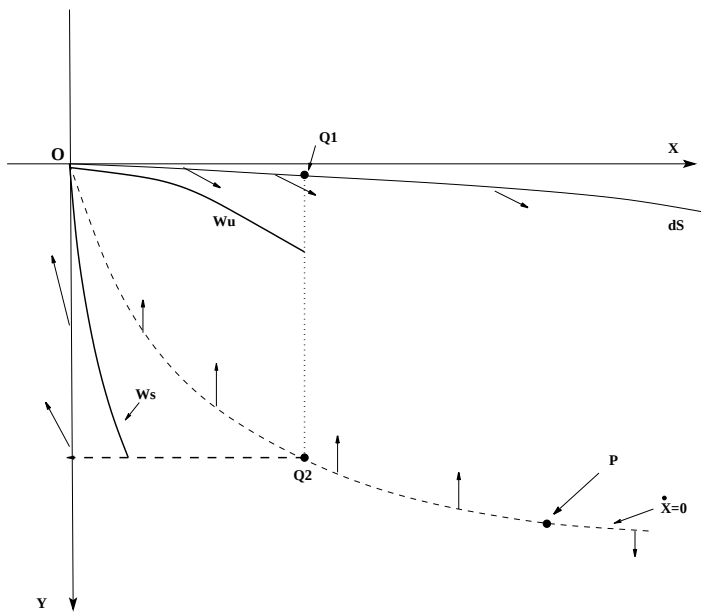

Figure 2: Construction of the unstable and stable sets $W^{u,s}(\tau)$ for the non autonomous system (3.2).

that $\lim_{r\to\infty} u(r) = 0$ and $u(r) > 0$ for r large, is such that either $u(r)r^{\frac{n-p}{p-1}}$ has positive finite limit or $\lim_{r\to\infty} u(r)r^{\frac{p}{q-p}} = P_x > 0$. In the former case the corresponding trajectory of (3.5) has the origin as ω-limit set, in the latter it has the critical point $\mathbf{P}$ as ω-limit set. Some integral manipulations are needed to obtain the correct value of the rate of decay, see [8]. Reasoning as above we can construct a stable manifold W^s for the origin. From some elementary dynamical considerations it can be seen also that singular solutions of (1.2) correspond to trajectories $\mathbf{x}(t)$ having the critical point $\mathbf{P}$ as α-limit set.

Now, repeating the proof made in the regular setting, it can be proved that W^u and W^s are shaped as sketched in Fig. (1) also when $p > 2$ or $p < q < 2$. So the results of Remark 3.2 hold also in this case.

We briefly consider the case in which $p < q < p_*$. Note that $\gamma > 0$, therefore the origin is an unstable node and it is the only critical point of the system. Once again from the Poincare-Bendixson criterion we deduce that there are no periodic trajectories. Using again the Pohozaev identity it can be shown that all the classic solutions of (1.2) correspond to a 1-dimensional manifold, say again W^u, similar to the one of the $q > p_*$ case, see fig. 1B

3.6 Remark. Consider a trajectory $\mathbf{x}^\tau(\mathbf{Q}, t)$ of (3.5) where $\mathbf{Q} \in W^u$. There is $\mathbf{S}(\tau) \in W^u$ such that $\mathbf{x}^\tau(\mathbf{Q}, t) = \mathbf{x}(\mathbf{S}(\tau), t + \tau)$. Denote by $u(d, r)$ the

classic solution corresponding to $\mathbf{x}(\mathbf{S}(\tau), t)$. Then, if we fix $\mathbf{Q}$, we have that $\mathbf{S}(\tau) \to \mathbf{O}$ and $d \to 0$ as $\tau \to \infty$, while $|\mathbf{S}(\tau)| \to \infty$, and $d \to \infty$ as $\tau \to -\infty$.

3.2 The regular case: $1 < p \leq 2$ and $f(u, r)$ Lipschitz continuous

Assume that conditions F0 and F1 are satisfied; we want to prove now that I^- contains an unbounded interval. In this subsection we make some further technical assumptions that will be removed later on. Namely we assume that $f(u, r)$ is locally Lipschitz continuous with respect to the u variable also when $u = 0$ and that $1 < p \leq 2$. Here and later q is the parameter defined in Hyp. F0. In this subsection we consider (3.2) with $l = q$ and leave the subscript unsaid. It follows that (3.2) is locally Lipschitz and that it is uniformly continuous in the t variable for $t < 0$. Let Ω be a small neighborhood of the origin; using invariant manifold theory for non-autonomous system, see [18], we can construct a local unstable manifold defined as follows

$$W^u_{loc}(\tau) := \{\mathbf{Q} \in \Omega \mid \lim_{t \to -\infty} \mathbf{x}^\tau(\mathbf{Q}, t) \to (0, 0)\}.$$

Furthermore $W^u(\tau)$ depends smoothly on τ. Then using the flow we can construct a global unstable manifold as follows

$$W^u(\tau) := \{\mathbf{P} = \mathbf{x}(\mathbf{Q}, t) \mid \mathbf{Q} \in W^u_{loc}(\tau - t), \quad t \in \mathbb{R}\}.$$

Obviously if $u(r)$ is a classic solution of (1.2) it corresponds to a trajectory $\mathbf{x}^\tau(\mathbf{Q}, t)$ such that $\mathbf{Q} \in W^u(\tau)$ for a certain τ. It can be proved that also the converse holds. More precisely the following Remark holds, even if the regularity Hypotheses are not satisfied, see [11] for a detailed proof.

3.7 Remark. Assume that Hyp. F0 is satisfied. There is a bijective correspondence between trajectories $\mathbf{x}^\tau(t)$ of (3.2) which have $\mathbf{O}$ as α-limit set and the classic solutions $u(d, r)$ of (1.2).

Now we are ready to state one result which plays a key role in the whole analysis. Here we make some restrictive assumptions that allow us to give a simpler proof. In the next subsection we will give a more technical proof that works in a more generic setting. However we think it is worthwhile to start from this simpler framework in which there are less technical difficulties, and from which the reader can get the main point of the proof.

3.8 Proposition. *Assume that $1 < p \leq 2$ and that $g(x, t)$ is $\mathcal{C}^1$ for any $(x, t) \in \mathbb{R}^2$. Assume that Hyp. F0 and F1 are satisfied and that for any x $\lim_{z \to 0} \frac{dg(x, \ln(z))}{dz} = 0$. Then there exists $D > 0$ such that $u(d, r)$ is a crossing*

solution for any $d > D$. Hence there is a continuous function $R_1(d) > 0$, defined for $d > D$, such that $u(d, r)$ is positive and decreasing for $0 < r < R_1(d)$ and $u(d, R_1(d)) = 0$; moreover $R_1(d) \to 0$ as $d \to \infty$.

Proof. Consider system (3.2) where we have added the extra variable $z = \exp(t)$, in order to deal with an autonomous system. The technical Hypothesis on the derivative of g ensures that the dynamical system obtained is Lipschitz continuous for $z = 0$ too. Note that the origin admits a 2-dimensional unstable manifold W^u and a 1-dimensional stable manifold. The manifold W^u is transversal to the plane $z = 0$ and the intersection of W^u with the plane $z = \exp(\tau)$ is the submanifold $W^u(\tau) \times \{\exp(\tau)\}$, where $W^u(\tau)$ is the global unstable manifold defined in the previous subsection. We denote by $W^u(-\infty)$ the intersection of the $\mathcal{C}^1$ manifold W^u and of the plane $z = 0$; note that $W^u(-\infty)$ coincides with the unstable manifold of system (3.5) where $c = a_0$, therefore it intersects transversally the negative y semi-axis.

Hence there is $N > 0$ large enough so that $W^u(\tau)$ intersects the negative y semi-axis in a point $\mathbf{Q}(\tau)$, for any $\tau < -N$. Thus, for any $\tau < -N$ the trajectories $\mathbf{x}^\tau(\mathbf{Q}(\tau), t)$ of (3.2) have $\mathbf{O}$ as α-limit point, are in $\mathbb{R}^2_+$ for any $t < 0$ and cross the negative y semi-axis at $t = 0$; so the corresponding solution $u(d(\tau), r)$ of (1.2) is a crossing solution. Note that $d(\tau)$ is well defined for $\tau < -N$ since $\mathbf{Q}(\tau)$ is uniquely defined. From Lemma 2.3 it follows that its inverse $\tau(d)$ is well defined and it is continuous. To conclude the proof of Proposition 3.8 we still need to prove that $R_1(d)$ is continuous and tends to 0 as d tends to ∞.

Follow the unstable manifold $W^u(\tau)$ from the origin towards the $\mathbb{R}^2_+$ semi-plane. Denote by $\mathbf{U}(\tau) = (U_x(\tau), U_y(\tau))$ the first intersection between the isocline $\dot{x} = 0$ and $W^u(\tau)$ for $-\infty \leq \tau \leq -N$. Let us denote by $t = T(\tau) > 0$ the value of t such that $\mathbf{x}^\tau(\mathbf{Q}(\tau), -t)$ belongs to $\dot{x} = 0$, thus $\mathbf{x}^\tau(\mathbf{Q}(\tau), -T(\tau)) = \mathbf{U}(\tau - T(\tau))$. Note that $T(\tau)$ is well defined and continuous for any $\tau < -N$ and that $\lim_{\tau \to -\infty} T(\tau) = T(-\infty)$ which is positive and bounded. Now, recalling that $u(d(\tau), r)$ is decreasing in r for $r < \exp(\tau - T(\tau))$, when τ is sufficiently large we get the following:

$$d(\tau) > u(d(\tau), \exp(\tau - T(\tau))) > \frac{U_x(-\infty)}{2} \exp(-\alpha\tau/2)$$

It follows that $d(\tau) \to +\infty$ as $\tau \to -\infty$; since $d(\tau)$ is invertible also the converse holds, namely $\tau(d) \to -\infty$ as $d \to +\infty$. Hence $\lim_{d\to\infty} R_1(d) = \exp(\tau(d)) = 0$. □

The next step is to prove that I^- is open. It is possible to work out a proof similar to the one given in [14] for the corresponding problem. However

it is not completely elementary so we give here a different proof which is more natural in this dynamical context. Once again we start with some regularity assumption that will be removed in the next subsection.

3.9 Lemma. *Assume that Hyp. F0 and F1 are satisfied. Furthermore assume that* $1 < p \leq 2$ *and that* $g(x,t)$ *is locally Lipschitz continuous for any* $(x,t) \in \mathbb{R}^2$*, then* I^- *is open.*

Proof. Assume that $d \in I^-$, and consider a sequence $d_k \to d$; we want to prove that $d_k \in I^-$ for k large. Fix $l = q$, where q is the constant given in Hypothesis F0, and consider the trajectories $\mathbf{X}(d_k,t)$ of (3.2) corresponding to the solutions $u(d_k,r)$ through (3.1). Fix $0 < R_0 \in J(d)$ and denote by $T_0 = \ln(R_0)$. From Lemma 2.3 we know that for any $\epsilon > 0$, we can find $N > 0$ large enough such that $R_0 \in J(d_k)$ and $|u(d_k,R_0) - u(d,R_0)| + |u'(d_k,R_0) - u'(d,R_0)| < \epsilon$ for any $k > N$. Therefore, for any $k > N$, we have $|\mathbf{X}(d_k,T_0) - \mathbf{X}(d,T_0)| < \epsilon R_0^{\alpha+1}$.

We know that there exist $T_1 = \ln(R_d)$ and $T_2 > T_1$ such that $\mathbf{X}(d,T_1)$ belongs to the negative y semi-axis, and $\mathbf{X}(d,T_2)$ is in the 3rd quadrant. Since (3.2) is locally Lipschitz for any t, the solutions of system (3.2) depend continuously on their initial data in each compact subset. So, using a continuity argument, we find that $\mathbf{X}(d_k,t)$ is in the 3rd quadrant for $t = T_2$ and $k > N$. Hence $\mathbf{X}(d_k,t)$ has to cross the y negative semi-axis for some $t = \hat{T}(k) < T_2$. Thus $u(d_k,r)$ is a crossing solution and $d_k \in I^-$ for k large; hence I^- is open. □

Now we are ready to prove one of the main result of the paper. We have seen that there is $c \geq A$ such that $I^- \supset (c,\infty)$ and $c \notin I^-$; we want to prove that $u(c,r)$ is a ground state. Again some of the Hypotheses needed are just technical and will be removed in the next subsection.

3.10 Proposition. *Assume that Hyp. F0, F1 and F2 are satisfied. Furthermore assume that* $1 < p \leq 2$*, that* $f(u,r)$ *is locally Lipschitz on both the variables, and that* $\lim_{z\to 0} \frac{dg(x,\ln(z))}{dz} = 0$*. Then* $u(c,r)$ *is a monotone decreasing ground state.*

Proof. First of all we know that $u(c,r)$ is positive and decreasing for any $r < R_c$, thus $\lim_{r\to R_c} u'(c,r) = 0$ and $L(c) \geq 0$. If $L(c) = 0$ we have that $u(c,r)$ is a ground state (with compact support if $R_c < \infty$ or everywhere positive if $R_c = \infty$) and we are done, so we can assume $L(c) > 0$. Suppose at first that $R_c < \infty$. Fix $\epsilon > 0$ small and choose $d = c + \epsilon$; from Lemma 2.3 we deduce that $R_d \to R_c$ as $\epsilon \to 0$. Consider system (3.2) where $l = q$ and the solutions $\mathbf{x}(c;t)$ and $\mathbf{x}(d;t)$ corresponding respectively to $u(c,r)$ and $u(d,r)$. Denote by $\mathbf{Q}(c) = \mathbf{x}(c;\ln(R_c))$ and by $\mathbf{Q}(d) = \mathbf{x}(d;\ln(R_d))$. Since

$d \in I^-$ it follows that $\mathbf{Q}(d)$ is in the negative y semi-axis, while $\mathbf{Q}(c)$ is in the x positive semi-axis, since $\frac{\partial}{\partial r}u(c, R_c) = 0$. But using Lemma 2.3 and the continuous dependence on initial data in the open 4th quadrant, it can be shown easily that $\mathbf{Q}(d) \to \mathbf{Q}(c)$ as $\epsilon \to 0$. Thus there is a trajectory $\mathbf{x}(c^*; t)$ where $c^* \in (c, d)$ such that $\lim_{t\to\ln(R_{c^*})} \mathbf{x}(c^*; t) = (0, 0)$. But this implies that $L(c^*) = 0$, thus $c^* \notin I^-$, a contradiction. So we can assume $R_c = \infty$.

Assume for contradiction that $L(c) > 0$, then $u(c, r) \geq L(c)$ for any r. Set again $d = c + \epsilon$; from Lemma 2.3 we deduce that for any $R > 0$ we can find $\epsilon(R) > 0$ such that $|u(d, R) - u(c, r)| < L(c)/2$. But $u(d, r)$ is a crossing solution, thus, eventually choosing a larger R and a smaller ϵ we have $0 < u(d, R) < L(c)/2$. Hence

$$u(c, R) \leq u(d, r) + |u(d, R) - u(c, r)| < L(c)$$

a contradiction. Thus $L(c) = 0$, so $u(c, r)$ is a monotone decreasing ground state. □

3.11 Remark. In the next subsection we will remove the Hypotheses that guarantee the local uniqueness of the trajectories of (3.2) which cross the coordinate axes. Note that these Hypotheses are needed just to prove that I^- contains an unbounded interval (Proposition 3.8) and that it is open (Lemma 3.9). This assumptions are not necessary to prove either that $A \notin I^-$ or that if $(c, \infty) \subset I^-$ and $c \notin I^-$ then $u(c, r)$ is a monotone decreasing ground state.

3.3 Non regular setting

Now we give a different proof of Proposition 3.10, without using regularity assumptions. We need to overcome some difficulties related to the lack of local uniqueness and of continuous dependence from initial data of system (3.2). Namely we cannot use anymore invariant manifold theory, but we need to construct stable and unstable sets using Lemma 3.5.

3.12 Theorem. *Assume that Hyp. F0 and F1 are satisfied. Then there exists $D > 0$ such that $u(d, r)$ is a crossing solution for any $d > D$. Furthermore we have* $\lim_{d\to\infty} R_1(d) = 0$.

To prove the Theorem we need some Lemmas. From Hyp. F0 we deduce that for any $\epsilon > 0$ we can find $M(\epsilon) > 0$ and $\delta(\epsilon) > 0$ such that $|f(u, r) - a_0 u^{q-1}| < \epsilon u^{q-1}$ for any $u > M$ and $0 \leq r \leq \delta$.

Assume that Hyp. F1 is satisfied and choose a positive constant $M > B$, where B has been defined in Remark 1.1. Consider a solution $u(d, r)$ where

$d > M$; from Lemma 2.1 we know that until $u(d,r) > M$ and $r < \nu$ we have $u'(d,r) < 0$. We can assume $\delta < \nu$ without losing of generality; let us define

$$\rho(d) = \begin{cases} \sup\{b \in [0,\delta] \mid u(d,r) > M \ \text{ for any } r \in [0,b)\} & \text{if } d > M, \\ 0 & \text{if } d \le M. \end{cases}$$

For any $\epsilon > 0$ we can find $M > 0$ such that

$$|f(u(d,r),r) - a_0 u|u|^{q-2}| < \epsilon |u(d,r)|^{q-1} \tag{3.8}$$

for $d \ge M$ and $0 \le r < \rho(d)$. We construct now the following auxiliary function

$$\bar{f}(u,r) = \begin{cases} f(u, \min\{r,\delta\}) & \text{if } u > M \\ \frac{u|u|^{q-2}|}{M^{q-1}} f(M, \min\{r,\delta\}) & \text{if } u \le M \end{cases} \tag{3.9}$$

Note that $\bar{f}(u,r)$ satisfies (3.8) for any u and r. We denote by $\bar{g}(x,t)$ the function obtained replacing f by $\bar{f}$ in (3.3); we will consider at first the non autonomous system (3.2) where $g = \bar{g}(x,t)$.

3.13 Lemma. *Consider system (3.2) where $g = \bar{g}(x,t)$. For any $\tau \in \mathbb{R}$ there is a trajectory $\boldsymbol{x}(t) = (x(t), y(t))$ such that $\lim_{t\to-\infty} \boldsymbol{x}(t) = (0,0)$, $y(t) < 0 < x(t)$ for any $t < \tau$ and $\boldsymbol{x}(\tau) = (0, Y(\tau))$. Furthermore there is $c > 0$ such that $Y(\tau) < -c$ for any $\tau \in \mathbb{R}$.*

Proof. From (3.8) and (3.9) it follows that, for any $t \in \mathbb{R}$, we have

$$(a_0 - \epsilon)x|x|^{q-2} < \bar{g}(x,t) < (a_0 + \epsilon)x|x|^{q-2}.$$

We want to prove the existence of an unstable manifold $W^u(\tau)$ for the non autonomous system, and to show that it crosse the y axis. We cannot rely on standard invariant manifold theory, due to the lack of regularity of (3.2). Hence we look for a positive invariant set in order to apply Lemma 3.5. To construct this set we perform a technical analysis on the phase portrait see Figure 3.

We denote by W_1^u and W_2^u the unstable manifolds of system (3.5) where respectively $c = a_0 - \epsilon$ and $c = a_0 + \epsilon$. Analogously we denote by W_1^s and W_2^s the stable manifolds of system (3.5) where respectively $c = a_0 - \epsilon$ and $c = a_0 + \epsilon$. We recall that these manifolds have been constructed in subsection 2.2 without asking (3.5) to be locally Lipschitz on the coordinate axes. We denote by **A**, **B**, **A'**, and **B'** the first intersection respectively of W_1^u, W_2^u, W_1^s and W_2^s with the isocline $\dot{x} = 0$. We denote by $\tilde{W}_1^u$, $\tilde{W}_2^u$, $\tilde{W}_1^s$, $\tilde{W}_2^s$ respectively the segment of W_1^u, W_2^u, W_1^s, W_2^s between the origin and **A**, **B**, **A'**, **B'**. Now consider the trajectories $\mathbf{X}_1(t)$ of (3.5) where $c = a_0 + \epsilon$

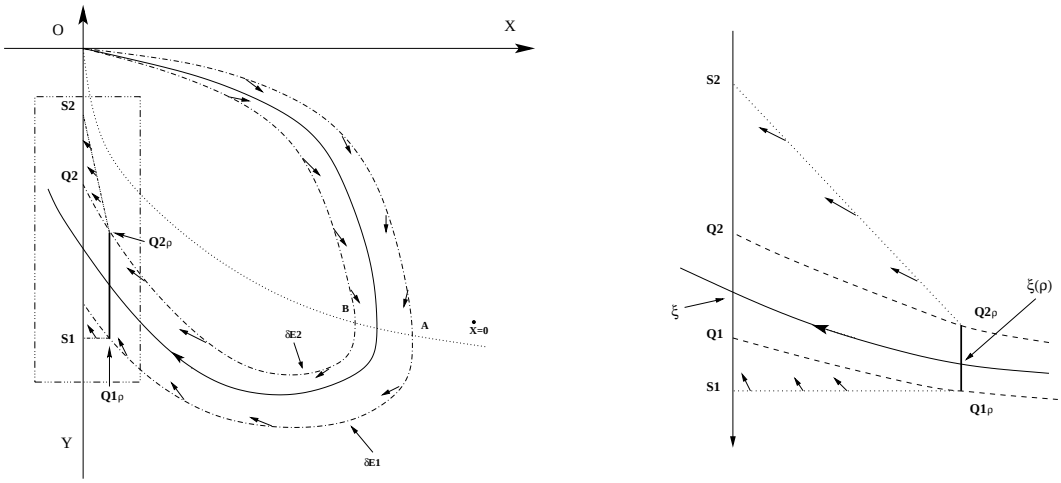

Figure 3: Construction of the crossing solutions for (1.2).

departing from **A** and $\mathbf{X}_2(t)$ of (3.5) where $c = a_0 - \epsilon$ departing from **B**. If ϵ is small enough we can assume that **A** and **B** are on the right with respect to **A'** and **B'**. So there are $T_1 > 0$ and $T_2 > 0$ such that $\mathbf{X}_1(t)$ and $\mathbf{X}_2(t)$ intersect the negative y semi-axis resp. at $t = T_1$ and at $t = T_2$. Note that $V_1 = \{\mathbf{X}_1(t) \mid 0 \le t \le T_1\}$, and $V_2 = \{\mathbf{X}_2(t) \mid 0 \le t \le T_2\}$ are such that $V_1 \cap V_2 = \emptyset$. Let us call $\partial E_1 = \tilde{W}_1^u \cup V_1$ and $\partial E_2 = \tilde{W}_2^u \cup V_2$ and $\partial E = (\partial E_1 \cup \partial E_2) \backslash \{\mathbf{O}\}$. We denote by $\mathbf{Q}_1 = \mathbf{X}_1(T_1)$ and by $\mathbf{Q}_2 = \mathbf{X}_2(T_2)$. Let E be the closed subset of $\mathbb{R}^2_+$ enclosed by ∂E and $\overline{\mathbf{Q}_1\ \mathbf{Q}_2}$.

We go back to the non-autonomous system (3.2). We claim that the flow on ∂E points towards the interior of E for any $t \in \mathbb{R}$. We recall in fact that $\tilde{W}_1^u$ is a subset of the graph of a trajectory $\bar{\mathbf{X}}_1(\mathbf{Q}, t) = (\bar{X}_1(\mathbf{Q}, t), \bar{Y}_1(\mathbf{Q}, t))$ of (3.5) where $c = a_0 - \epsilon$ and $\mathbf{Q}= (Q_x, Q_y) \in \tilde{W}_1^u$. Consider the trajectory $\mathbf{X}^\tau(\mathbf{Q}, t)$ of (3.2), then $\frac{\partial}{\partial t}\bar{X}_1(\mathbf{Q}, 0) = \frac{\partial}{\partial t}X^\tau(\mathbf{Q}, 0)$ and

$$\frac{\partial}{\partial t}\bar{Y}_1(\mathbf{Q}, 0) - \frac{\partial}{\partial t}Y^\tau(\mathbf{Q}, 0) = \bar{g}(Q_x, \tau) - (a_0 - \epsilon)|Q_x|^{q-1} > 0 \qquad \text{for any } \tau \in \mathbb{R}.$$

Thus the flow on $\tilde{W}_1^u$ points towards the interior of E. Reasoning similarly the claim can be proved for the whole ∂E.

Assume at first that $q \ge 2$ so that the system is locally Lipschitz on the y axis. Then, using Lemma 3.5, for any $\tau \in \mathbb{R}$, we can construct the unstable set

$$W^u(\tau) := \{Q \in E \mid \mathbf{X}^\tau(\mathbf{Q}, t) \in E \ \text{ for any } t < 0 \text{ and } \lim_{t \to -\infty} \mathbf{X}^\tau(\mathbf{Q}, t) = \mathbf{O}\}.$$

Hence there is a point $\xi(\tau) \in W^u(\tau) \cap \overline{\mathbf{Q}_1\mathbf{Q}_2}$ (note that if the system is Lipschitz $W^u(\tau)$ is a manifold and $\{\xi(\tau)\} = W^u(\tau) \cap \overline{\mathbf{Q}_1\mathbf{Q}_2}$). It follows that

$\mathbf{X}^\tau(\xi(\tau),t)$ is in E for any $t<0$ and it crosses the y negative semi-axis at $t=0$. The corresponding solution $u(d,r)$ of (1.2) is such that $u(d,r)>0$ for $0\le r<R_1(d)=\exp(\tau)$, and $u(d,R_1(d))=0$. Therefore $u(d,r)$ is a crossing solution.

When the system is just holder continuous on the y axis the continuous dependence on $\overline{\mathbf{Q}_1\ \mathbf{Q}_2}$ is lost so we have to modify slightly the proof. Fix $\rho>0$ small and consider $\{\mathbf{Q}_i(\rho)\}=V_i\cap\{(\rho,y)\mid y<0\}$, for $i=1,2$. We call $\partial E_i(\rho)$ the subset of ∂E_i between the origin and $\mathbf{Q}_i(\rho)$, for $i=1,2$. Let $E_i(\rho)$ be the subset of E enclosed by $\partial E_1(\rho)$ and $\partial E_2(\rho)$ and the rectilinear segment $\overline{\mathbf{Q}_1(\rho)\mathbf{Q}_2(\rho)}$. Then, repeating the argument above, we find a point $\xi^u(\rho,\tau)$ such that $\mathbf{x}(\xi^u(\rho,\tau),t+\tau)\in E(\rho)$ for any $t<0$. Then it can be seen easily that there is $T>0$ such that $\mathbf{x}(\xi^u(\rho,\tau),t+\tau)$ intersects $\overline{\mathbf{Q}_1\ \mathbf{Q}_2}$ at $t=T$, since it cannot cross ∂E_1 and ∂E_2. Set $\mathbf{Q}_i=(0,Y_i)$ for $i=1,2$; we conclude the proof by observing that, by construction we can find $c>0$ such that $-c<Y_2<Y_1$. □

From the previous Lemma it follows that all the classic solution $u(d,r)$ are crossing solutions. We denote by $R_1(d)$ the first zero of $u(d,r)$. We need the following Lemma.

3.14 Lemma. *Consider a solution $u(d,r)$ of equation (1.2) where $f(u,r)$ is the function $f=\bar f(u,r)$ defined in (3.9). Then we have* $\lim_{d\to\infty}R_1(d)=0$.

Proof. From the previous Lemma we know that each solution $u(d,r)$ is a crossing solution. Consider the solution $u(d,r)$ and the corresponding trajectory $\mathbf{X}^\tau(\xi(\tau),t)$: the function $\tau(d)$ is then well defined. From Lemma 2.3 it follows easily that $\tau(d)$ is continuous. We want to show that $\tau(d)\to-\infty$ as $d\to\infty$. However $\xi(\tau)$ is not uniquely defined, thus the inverse function $d(\tau)$ may not be well defined. So we cannot simply repeat the reasoning of Proposition 3.8.

Fix $d>0$ and consider the solution $u(d,r)$, $u_1(d,r)$ and $u_2(d,r)$ respectively of the space dependent equation where $f=\bar f$, and of the space independent equations where $f=(a_0-\epsilon)u|u|^{q-2}$ and $f=(a_0+\epsilon)u|u|^{q-2}$. Let us denote respectively by $\mathbf{X}(d,t)$, $\mathbf{X}_1(d,t)$ and $\mathbf{X}_2(d,t)$ the corresponding trajectories of system (3.2) and (3.5) and by $\tau(d)$, $\tau_1(d)$ and $\tau_2(d)$ the value of t at which the trajectories cross the y axis. From Remark 3.3 it follows that $\tau_i(d)\to-\infty$ as $d\to\infty$, for $i=1,2$ and that the functions $\tau_i(d)$ are invertible. We take d large enough so that $\tau_i(d)<0$. It can also be shown that $\tau_2(d)<\tau_1(d)$.

We recall that $\mathbf{B}=(B_x,B_y)$ is the first intersection between $\tilde W_2^u$ and the isocline $\dot x=0$; we denote by $\mathbf{C}$ the intersection between $\tilde W_1^u$ and $x=B_x$. We denote by $T(d)$, $T_1(d)$ and $T_2(d)$ the value of t for which the trajectories

intersect $\overline{\mathbf{BC}}$. We claim that $u_2(d,r) \leq u(d,r) \leq u_1(d,r)$ for any $r \leq \exp(T_1(d))$ and that $T_1(d) \leq T(d) \leq T_2(d) < 0$. In fact let us denote by $r_0 = \sup\{r \geq 0 \,|\, u_2(d,r) \leq u(d,r)\}$ and by $t_0 = \ln(r_0)$ and assume for contradiction that $t_0 > \check{T} = \min\{T(d), T_2(d)\}$. Then $X_2(d,t_0) = X(d,t_0)$ and $Y(d,t_0) \geq Y_2(d,t_0)$; hence $\dot{X}(d,t_0) \geq \dot{X}_2(d,t_0)$, a contradiction, thus $u(d,r) \geq u_2(d,r)$ for any $r \leq \exp(\check{T})$. Then it easily follows that $T(d) \leq T_2(d)$. Reasoning in the same way we can prove that $u(d,r) \leq u_1(d,r)$ for $r \leq \exp(T_1(d))$, so that we find $T_1(d) \leq T(d) \leq T_2(d)$. Note that $T_i(d) \to -\infty$ as $d \to \infty$, for $i = 1, 2$.

Let us denote by $\hat{T}(d) = \tau(d) - T(d)$, $\hat{T}_i(d) = \tau_i(d) - T_i(d)$, for $i = 1, 2$. In fact $\hat{T}_1(d)$ and $\hat{T}_2(d)$ are independent from d, they are both finite and $\hat{T}_1(d) > \hat{T}_2(d)$, see Remark 3.3. From a continuity argument it follows that $0 < \hat{T}(d) < 2\hat{T}_1(d)$, if $\epsilon > 0$ is small enough. Hence $\tau(d) = \hat{T}(d) + \tau(d) \to -\infty$ as $d \to \infty$. So we find that any solution $u(d,r)$ is a crossing solution and its first zero $R_1(d) = \exp(\tau(d))$ is such that $R_1(d) \to 0$ as $d \to \infty$ and $R_1(d) \to \infty$ as $d \to 0$. □

Now we want to prove these two Lemmas for the original system (3.2). Once again the proof is technical and it involves the construction of some barrier set. However the underlying idea is that our dynamical system must be close to the autonomous dynamical system (3.5) where $c = a_0$.

Proof of Theorem 3.12 Fix $\rho > 0$ small and consider the trajectory $\mathbf{x}^{\tau,u}(\rho,t)$ of (3.4) such that $\mathbf{x}^{\tau,u}(\rho,0) = \xi^u(\rho,\tau)$, where $\xi^u(\rho,\tau) \in \mathbb{R}^2_+$ has been defined in Lemma 3.13. Denote by $N = \min\{\ln(\nu), \frac{1}{\alpha}\ln\frac{\rho}{M}\}$ and fix $\tau < N$. Consider the solution $u(d,r)$ of (1.2) corresponding to the trajectory $\mathbf{x}^{\tau,u}(\rho,t)$; clearly d depends on ρ and τ. Observe that $u'(d,r) < 0$ for any $0 < r < \exp(\tau)$ and

$$u(d,e^\tau) = x^{\tau,u}(\rho,0)e^{-\alpha\tau} = \rho e^{-\alpha\tau} > \rho e^{-\alpha N} > M.$$

Therefore $u(d,r) > M$ for any $0 \leq r < \exp(\tau)$. It follows that $f(u(d,r),r) = \bar{f}(u(d,r),r)$ for $r < \exp(\tau)$ and $g(x^{\tau,u}(\rho,t),t+\tau) = \bar{g}(x^{\tau,u}(\rho,t),t+\tau)$ for any $t < 0$. We can repeat this argument for any $\tau < N$ and correspondingly for any $u(d,r)$ where $d > D$ for a certain $D > 0$. Therefore, for any $d > D$, the solutions $u(d,r)$ of the original problem coincide with the ones of the modified problem in the interval $[0, \exp(\tau)]$. Hence the corresponding trajectories $\mathbf{x}^{\tau,u}(\rho,t)$ of (3.2) are such that $\mathbf{x}^{\tau,u}(\rho,t) \in E(\rho)$ for any $t < 0$ and $\mathbf{x}^{\tau,u}(\rho,0) = \xi(\rho,\tau)$, see Fig. 3.

Now we want to show that $\mathbf{x}^{\tau,u}(\rho,t)$ has to cross the y negative semi-axis for a certain finite t. We recall that $\mathbf{Q}_i(\rho) = (\rho, Y_{i,\rho})$ for $i = 1, 2$ and $\mathbf{Q}_2 = (0, Y_2)$ are the intersection of V_2 respectively with the line $x = \rho$ and the y axis. We denote by $\mathbf{S}_2 = (0, Y_2/2)$. Consider the point $\mathbf{Q}_1(\rho) = (\rho, Y_{1,\rho})$

and the intersection $\mathbf{S}_1 = (0, Y_{1,\rho})$ of the line $y = Y_{1,\rho}$ with the y axis. Observe that $Y_{1,\rho} < Y_{2,\rho} < Y_2 < 0$ and denote by $\mathcal{B}$ the quadrilater whose vertices are $\mathbf{S}_1, \mathbf{Q}_1(\rho), \mathbf{S}_2$ and $\mathbf{Q}_2(\rho)$. Note that the flow on $\overline{\mathbf{S}_1\ \mathbf{Q}_1(\rho)}$ points towards the interior of $\mathcal{B}$.

Denote by $m(\rho) = (Y_{2,\rho} - Y_2/2)/\rho$. We can write the segment $\overline{\mathbf{S}_2\ \mathbf{Q}_2(\rho)}$ as follows

$$\overline{\mathbf{S}_2\ \mathbf{Q}_2(\rho)} = \{(x, y) \mid y = m(\rho)x + Y_2/2\,, \quad 0 \le x \le \rho\}$$

Note that $m(\rho) \to -\infty$ as $\rho \to 0^+$. Let us denote by $-C = \min\{f(u, r) \mid u \ge 0,\ 0 \le r \le \nu\}$; note that

$$\frac{\dot{y}}{\dot{x}} = \frac{\gamma y - g(x, t)}{\alpha x - |y|^{1/(p-1)}} > -\frac{|\gamma Y_{2,\rho}| + C\nu^{\alpha(q-1)}}{|Y_2/2|^{1/(p-1)} - \alpha\rho} := m^*,$$

whenever $0 \le t \le \ln(\nu)$, $\quad 0 \le x \le \rho$ and $Y_{1,\rho} \le y \le Y_2/2$. Eventually choosing a smaller ρ (and correspondingly a smaller $\exp(N)$ and a larger D), we can assume $m(\rho) < m^*$. Thus the flow on $\overline{\mathbf{S}_2\ \mathbf{Q}_2(\rho)}$ points towards the interior of $\mathcal{B}$, too. Since $\dot{x}$ is strictly negative in $\mathcal{B}$, eventually choosing a smaller ρ, we can conclude that the trajectory $\mathbf{x}(\xi^{\tau,u}(\rho), t + \tau)$ crosses the axis after a positive time T and it is in $\mathcal{B}$ for $0 < t < T$. Furthermore $T \to 0$ as $\rho \to 0$.

Consider now the solution $u(d, r)$ corresponding to $\mathbf{x}(\xi^{\tau,u}(\rho), t)$; we have proved that there is $R_1 = \exp(T+\tau)$ such that $u(d, r)$ is positive and decreasing for $0 \le r < R_1$ and $u(d, R_1) = 0 > u'(d, R_1)$. From Lemma 3.14 it follows that $d \to +\infty$ as $\tau \to -\infty$; so we can conclude that there is $D > 0$ such that $u(d, r)$ is a crossing solution for any $d > D$ and $R_1(d) \to 0$ as $d \to \infty$. □

Note that we have also implicitly proved the following.

3.15 Remark. Consider the non autonomous system (3.2) and the set $\bar{\xi}(\tau)$ obtained intersecting $W^u(\tau)$ and the y axis. We can find $N > 0$ and $c > 0$ such that, for any $\tau < -N$, $\xi(\tau) = (0, Y(\tau)) \in \bar{\xi}(\tau)$ we have $Y(\tau) < -C$.

Now we want to adapt to the non regular setting the proof of Lemma 3.9, in order to weaken the Hypotheses.

3.16 Lemma. *Assume that Hyp. F0 and F1 are satisfied, then I^- is open.*

Proof. Assume that $d \in I^-$, and consider a sequence $d_k \to d$; we claim that $d_k \in I^-$ for k large. As in Lemma 3.9 we fix $l = q$ and consider the trajectories $\mathbf{X}(d, t)$ and $\mathbf{X}(d_k, t)$ of (3.2) corresponding respectively to the solutions $u(d, r)$ and $u(d_k, r)$ of (1.2). Again we fix $R_0 \in J(d) \cap J(d_k)$, for k large, and we denote by $T_0 = \ln(R_0)$ and by $T_1 = \ln(R_1(d))$. We

choose $\rho > 0$ so that $x(T_0) = 2\rho$. We can find $K > 0$ large enough so that $|\mathbf{X}(d, T_0) - \mathbf{X}(d_k, T_0)| < \rho$ for any $k > N$. Thus $\mathbf{X}(d_k, T_0) \in B(\mathbf{X}(d, T_0), \rho)$, where $B(\mathbf{X}(d, T_0), \rho)$ is the ball of radius ρ centered in $\mathbf{X}(d, T_0)$. We recall that continuous dependence on initial data is lost for trajectories crossing the y axis, but it still holds in compact subsets of the open 4th quadrant. We know that $\mathbf{X}(d, t)$ has to cross the y axis transversally at $t = T_1$, since the flow of system (3.2) is transversal to the open negative y semi-axis. Using this observation and reasoning as at the end of the proof of Theorem 3.12, we can show that each trajectory of (3.2) passing through $B(\mathbf{X}(d, T_0), \rho)$ at $t = T_0$, has to cross the y negative semi-axis too. Therefore $u(d_k, r)$ is a crossing solution and $d_k \in I^-$, so the Lemma is proved. □

Now we have proved that there is $c \notin I^-$ such that $(c, \infty) \subset I^-$. Using this fact, Proposition 3.10 and Remark 3.11, Theorem 2.8 follows.

4 Singular Ground States

We want to prove now the existence of uncountably many S.G.S. For this purpose we have to analyze the trajectories having the origin as ω-limit set and to follow them backwards in t. The first step is to construct the stable set W^s. Assume at first that $1 < p \leq 2$ and consider a non-linearity $f(u, r)$ of type (1.3), and $q_1 > p_* = \frac{p(n-1)}{n-p}$, where the functions $k_i(r)$ converge to a finite value as $r \to \infty$. We apply the change of variables (3.1) where $l = q_1$ and we consider system (3.2). Assume also that $q_1 \geq 2$ and observe that (3.2) is locally Lipschitz and uniformly continuous with respect to t, for $t > 0$. Furthermore note that the origin is a critical point for any t. Thus, using invariant manifold theory for non-autonomous systems, we can construct stable manifolds $W^s(\tau)$ for any τ, see [18], [9], [11]. Here we use a different approach, relying on Lemma 3.5. This allows us to remove the technical assumption on p and to consider more generic nonlinearity $f(u, r)$. We just assume that Hyp. F0 and F1 are satisfied, so that Theorem 3.12 holds.

We begin by proving a result concerning the asymptotic behaviour of positive solution $u(r)$ as $r \to 0$. Consider the autonomous system (3.5) where q is the parameter defined in F0, $c = a_0 > 0$ and $\mathbf{P}$ is, as usual, the critical point contained in the 4th quadrant.

4.1 Lemma. *Assume that Hyp. F0 is satisfied and consider a solution $\boldsymbol{x}(t)$ of system (3.2) where $l = q$. Assume that there is T such that $y(t) < 0 < x(t)$ for any $t < T$, then either $\lim_{t \to -\infty} \boldsymbol{x}(t) = \boldsymbol{O}$ or $\lim_{t \to -\infty} \boldsymbol{x}(t) = \boldsymbol{P}$. Moreover*

assume that we are in the former case, then the corresponding solution $u(r)$ of (1.2) is a classic solution.

Proof. Assume for contradiction that $\mathbf{x}(t)$ is unbounded, then there is a sequence $t_n \to -\infty$ such that $\lim_{n\to\infty} x(t_n) = +\infty$. It follows that for the corresponding solution $u(r)$ of (1.2) we have $\lim_{n\to\infty} u(r_n) = +\infty$, where $r_n = \ln(t_n)$. Since $u(r)$ is monotone decreasing we have $\lim_{r\to 0} u(r) = +\infty$ and

$$(|u'(r)|^{p-1} r^{n-1})' = f(u,r) r^{n-1} > a_0/2 \ u(r)^{q-1} r^{n-1},$$

for $0 \le r < R$ and $R > 0$ small enough. Therefore when $0 < r < R$ we obtain

$$|u'(r)|^{p-1} r^{n-1} > |u'(\frac{r}{2})|^{p-1} (\frac{r}{2})^{n-1} + \frac{a_0}{2} \int_{r/2}^{r} u(s)^{q-1} s^{n-1} ds >$$
$$> \frac{a_0}{2} u(r)^{q-1} \int_{r/2}^{r} s^{n-1} ds$$

so that for all small $r > 0$ we get the following:

$$u'(r) < -C u(r)^{\frac{q-1}{p-1}} r^{\frac{1}{p-1}}$$

where $C > 0$ is a constant. Separating the variables and integrating we find $u(r) < C r^{-\frac{p}{q-p}}$, therefore $x(t) < C$, a contradiction; so we can assume that $\mathbf{x}(t)$ is bounded.

Assume first that there is a number $\delta > 0$ such that $x(t) > \delta$ as $t \to -\infty$. Consider a sequence $\tau_n \to -\infty$: we have that $x^{\tau_n}(t) = x(t + \tau_n)$ is uniformly bounded above and below and $\mathbf{x}^{\tau_n}(t)$ satisfy (3.4) for $\tau = \tau_n$. Once again $u(r) > \delta r^{-\alpha}$ for r small, thus $\lim_{r\to 0} u(r) = \infty$. It follows that $\lim_{n\to\infty} \frac{g(x^{\tau_n}(t), t+\tau_n)}{|x^{\tau_n}(t)|^{q-1}} = a_0$. A standard compactness argument yields that $\mathbf{x}^{\tau_n}(t)$ admits a subsequence uniformly convergent on compact subsets of $\mathbb{R}$ to a positive solution $\mathbf{x}_0(t) = (x_0(t), y_0(t))$ of (3.5) where $c = a_0$. Moreover $x_0(t)$ is bounded above and below away from zero for any t. But a phase plane analysis shows that such a solution must converge to $\mathbf{P}$ as $t \to -\infty$. This argument holds for any convergent subsequence of $\mathbf{x}^{\tau_n}(t)$, thus for the arbitrariness of τ_n we conclude that $\mathbf{x}(t) \to \mathbf{P}$ as $t \to -\infty$.

Now assume that there is a sequence $t_n \to -\infty$ such that $x(t_n) \to 0$ but $x(t) \not\to 0$ as $t \to -\infty$. Then we may find a second sequence $t'_n \to -\infty$ such that $0 < \delta < x(t'_n) < P_x/2$ and $y(t'_n) < 0$. Then, reasoning as above, we conclude that there is a subsequence $\mathbf{x}(t'_n)$ which converges uniformly on compact subset of $\mathbb{R}$ to a solution $\mathbf{x}_0(t)$ of (3.5) where $c = a_0$; moreover this solution is such that $0 < \delta < x_0(t) < P_x/2$ and $y(t) < 0$ for any t. But a phase

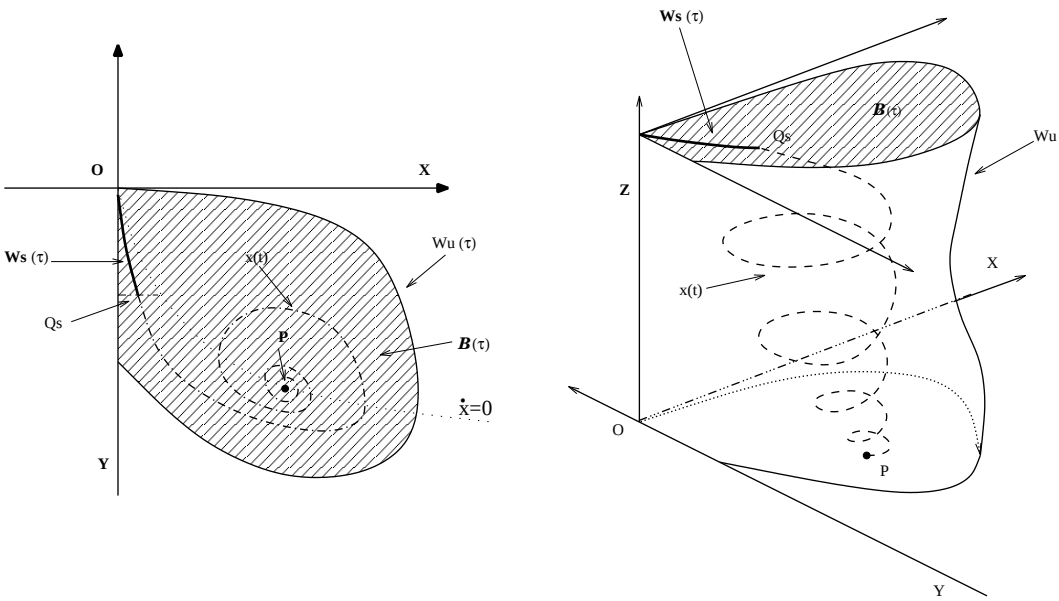

Figure 4: Construction of the singular ground states for (1.2).

plane analysis shows that such a solution does not exist, therefore we have a contradiction. Hence $\mathbf{x}(t)$ converges either to $\mathbf{O}$ or to $\mathbf{P}$ as $t \to -\infty$. Assume the former, then the limit $\lim_{r\to 0} u(r)$ exists and is positive. Assume for contradiction that $\lim_{r\to 0} u(r) = +\infty$, then $\lim_{r\to 0} f(u(r), r)/(u(r)^{q-1}) = a_0$. So we can apply the asymptotic estimates known for system (3.5) to this solution; according to [8] $\lim_{r\to 0} u(r) = +\infty$ implies $\lim_{t\to -\infty} \mathbf{x}(t) = \mathbf{P}$, a contradiction. Therefore $0 < \lim_{r\to 0} u(r) = d < \infty$. Note now that

$$\lim_{t\to -\infty} |y(t)| e^{\gamma t} = \lim_{r\to 0} |u'(r)|^{\frac{1}{p-1}} r^{\frac{n-1}{p-1}} = 0$$

thus applying De l'Hospital rule we find

$$\lim_{r\to 0} |u'(r)| = \lim_{r\to 0} \frac{|u'(r)| r^{n-1}}{r^{n-1}} = \lim_{r\to 0} \frac{f(u(r), r)}{n-1} r = 0$$

Thus $u(r)$ is a classic solution. □

Consider system (3.2) where as usual $l = q$, and q is the parameter defined in F0. We want to apply as usual Lemma 3.5, but we need the following technical Lemma.

4.2 Lemma. *Assume that Hyp. F0 and F1 are satisfied and consider the isocline $\dot{x} = 0$. There is $m > 0$ such that the flow of (3.2) on the subset of the isocline $\dot{x} = 0$ where $0 < x < m$ points upwards, for any $t \in \mathbb{R}$.*

Proof. First of all we recall that along the isocline we have $y = -(\alpha x)^{p-1}$, whenever $x > 0$. From Hyp. F1 we know that there are $a > 0$ and $\rho > 0$ such that $f(u, r) < 0$ for $(u, r) \in (0, a) \times (\rho, \infty)$. Fix $t > T = \ln(\rho)$ and denote by $\bar{m}(t) = ae^{\alpha(q-1)t} > 0$: it follows that $g(x, t) < 0$, for $0 < x < \bar{m}(t)$. Therefore along the isocline we have

$$\dot{y} = -\gamma(\alpha x)^{p-1} - g(x, t) > 0, \tag{4.1}$$

for $0 < x < \bar{m}(t)$. We want to prove that there is $m > 0$ independent of t, such that the inequality (4.1) holds for $0 < x < m$. Note that $\bar{m}(t) = a(e^t)e^{\alpha(q-1)t} \to +\infty$ as $t \to +\infty$, therefore there exists

$$\bar{m}_1 = \min\{\bar{m}(t) \,|t \geq T\} > 0.$$

We recall that for any fixed x, $g(x, t) \to a_0 x|x|^{q-2}$ as $t \to -\infty$ and (3.2) tends to (3.5) with $c = a_0$. So (3.5) admits a critical point $\mathbf{P}$=(P_x, P_y) and that along the isocline $\dot{x} = 0$ we have $\dot{y} > 0$ whenever $0 < x < P_x$. Therefore there exists the minimum

$$m_2 = \min\{m(t) \,| -\gamma(\alpha x)^{p-1} - g(x, t) > 0 \quad \text{for } 0 < x < m(t) \text{ and } t \leq T \,\} > 0.$$

So if we choose $m = \min\{m_1, m_2\}$ the Lemma is proved. □

We wish to stress that $\lim_{t\to-\infty} g(x, t)$ is bounded for any $x \in K$, where K is a compact subset of $\mathbb{R}$. However $\lim_{t\to\infty} g(x, t) = \infty$, for any fixed $x > 0$. Now we are ready to prove Theorem 2.10. We stress that this is one of the main contribution of the paper, since singular solutions for these families of nonlinearities have not been detected before even for the classical case $p = 2$ and for spatial independent nonlinearities f of type (1.3).

Proof of Theorem 2.10. Let us denote by $\mathbf{B}$= (m, Y_m) the point of the isocline $\dot{x} = 0$ where $x = m$, and by a the subset of the isocline $\dot{x} = 0$ where $0 < x \leq m$. We denote by $\mathbf{A}$ the point $(0, Y_m)$, by $b = \overline{\mathbf{OA}} \backslash \{\mathbf{O}\}$ and by $\mathcal{R}$ the bounded subset enclosed by a, b and $\overline{\mathbf{Q}_1\ \mathbf{Q}_2}$. Note that the flow of (3.2) on the open y negative semi-axis points towards the set $\{(x, y) \mid x < 0\}$, for any t. From this fact and from Lemma 4.2 we deduce that the flow on a and on b, points towards the exterior of $\mathcal{R}$, while on the open segment $\overline{\mathbf{Q}_1\ \mathbf{Q}_2}$ it points towards the interior of $\mathcal{R}$, for any t finite. We want to construct a stable set but we cannot directly apply Lemma 3.5 since $g(x, t) \to \infty$ as $t \to +\infty$ so that the right hand side of (3.2) is unbounded. Let us fix $\tau \in \mathbb{R}$ and give the following definition

$$\begin{aligned} W^s_{loc}(\tau) :=& \{\mathbf{Q} \in \mathcal{R} \mid \exists T \leq \infty : \mathbf{x}^\tau(\mathbf{Q}, t) \in \mathcal{R} \text{ for } 0 \leq t < T \text{ and} \\ & \lim_{t\to T^-} \mathbf{x}^\tau(\mathbf{Q}, t) = \mathbf{O}\}. \end{aligned}$$

We denote by $E = \mathcal{R} \setminus W^s_{loc}(\tau)$ and by $T(\mathbf{Q}) = \min\{t \geq 0 \mid \mathbf{x}^\tau(\mathbf{Q}, t) \in a \cup b\}$, for any $Q \in E$. We denote by

$$\bar{\alpha} := \{\mathbf{Q} \in E \mid \mathbf{x}^\tau(\mathbf{Q}, T(\mathbf{Q})) \in a\}, \qquad \bar{\beta} := \{\mathbf{Q} \in E \mid \mathbf{x}^\tau(\mathbf{Q}, T(\mathbf{Q})) \in b\}.$$

From the continuity of the flow we deduce that $\bar{\alpha}$ is open in $\mathcal{R}$. Consider now a continuous path $\sigma : [0,1] \to \mathcal{R}$ such that $\sigma(0) \in a$ and $\sigma(1) \in b$. We define the set

$$\alpha := \{s \in [0,1] \mid \sigma(s) \in \bar{\alpha}\}, \qquad \beta := \{s \in [0,1] \mid \sigma(s) \in \bar{\beta}\}.$$

Observe that α is open in $[0,1]$ and that $1 \notin \alpha$, therefore there exists $c > 0$ such that $[0, c) \subset \alpha$ and $c \notin \alpha$. From a continuity argument it easily follows that $c \notin \beta$. Then observing that $\dot{y} \geq 0$ for any $\mathbf{Q} \in \mathcal{R}$ and any $t \geq 0$ it follows that $\sigma(c) \in W^s_{loc}(\tau)$. Therefore we can apply Lemma 3.4 and prove that $W^s_{loc}(\tau)$ contains a compact connected set joining the origin and $\overline{\mathbf{AB}}$. Let us denote by $W^s_\rho(\tau) = W^s_{loc}(\tau) \cap \{(x,y) \,|\, 0 \leq x \leq \rho, \ \}$. Note that, if $\rho > 0$ is small enough, it follows that $W^s_\rho(\tau)$ is a compact connected set and it varies continuously with respect to τ (with the Hausdorff distance). Abusing the notation we denote by $W^s_\rho(\tau)$ such a set.

From Theorem 3.12 and Remark 3.15 we know that there is $N > 0$ large such that for any $\tau < -N$ we can construct a closed connected unstable set $W^u(\tau)$ which joins $\mathbf{O}$ and a point $\mathbf{Q}(\tau) = (0, Y(\tau))$ where $Y(\tau) < -c$ for some $c > 0$. Furthermore $W^u(\tau)$ is contained in the 4th quadrant. Let us denote by $\mathcal{E}(\tau)$ the bounded subset of $\{(x,y) \mid y \leq 0 \leq x\}$ enclosed by $W^u(\tau)$. We can choose $\rho > 0$ small enough so that $W^s_\rho(\tau)$ is contained in $\mathcal{E}(\tau)$ for any $\tau < -N$. We fix $\tau < -N$ and choose $\mathbf{Q}^s = (Q^s_x, Q^s_y) \in W^s_\rho(\tau)$ so that $Q^s_x > \rho/2$. We consider the trajectory $\mathbf{x}^\tau(\mathbf{Q}^s(\tau), t)$ of (3.4) and the corresponding solution $v(r)$ of (1.2). We want to prove that $v(r)$ is a monotone decreasing singular ground state.

Consider the autonomous 3-dimensional system obtained from (3.2) adding the extra variable $z = \exp(t)$ and setting $l = q$.
Denote by $W^u = \bigcup_{\tau < -N} (W^u(\tau) \times \exp(\tau))$ and by $\mathcal{E} = \cup_{\tau < -N} (\mathcal{E}(\tau) \times \exp(\tau))$. Obviously the sets W^u and $\mathcal{E}$ are invariant for the flow in the past. It follows that the trajectory $\mathbf{x}^{\tau,s}(t) = (\mathbf{x}^\tau(\mathbf{Q}^s(\tau), t), \exp(t+\tau))$ of the extended system is forced to stay in $\mathcal{E}$ for any $t < 0$. Therefore from Lemma 4.1 we deduce that $\mathbf{x}^\tau(\mathbf{Q}^s(\tau), t)$ converges either to $\mathbf{O}$ or to $\mathbf{P}$ as $t \to -\infty$, so that either $v(r)$ is a classic solution and $0 < \lim_{r \to 0} v(r) = d < \infty$ or $\lim_{r \to \infty} v(r) r^\alpha = P_x$.

Assume for contradiction that there exists $d > 0$ such that $v(0) = d$. Since $y^{\tau,s}(t) < 0$ for $t < 0$ it follows that $v(r)$ is decreasing for $r < \exp(\tau)$. Therefore, eventually choosing a larger N we find the following

$$d = v(0) > x^{\tau,s}(0) r^{-\alpha\tau} > \frac{\rho}{2} r^{-\alpha\tau} > D$$

where D is the positive constant defined in Theorem 3.12. It follows that $v(0) > D$ and that $v(r)$ is a ground state, but this contradicts Theorem 3.12. Therefore $v(r)$ is a monotone decreasing singular ground state and $\lim_{r\to\infty} v(r)r^\alpha = P_x$. Repeating the reasoning for any $\tau < -N$ we prove the existence of uncountably many solutions of this type. □

5 Appendix

Appendix A: asymptotic estimates for positive solutions for $r \to +\infty$.

Now we prove the Propositions concerning the asymptotic behavior of positive solutions. In the proofs we mix some ideas borrowed from [12] and some dynamical systems methods.

Proof of Proposition 2.4. We begin from claim A; assume for contradiction that $u(r) > 0$ for any $r > R$. Note that the function $E(u(r))$ defined in (2.1) is monotone decreasing for $r > R$ and that $\lim_{r\to\infty} E(u(r)) = 0$. It follows that $E(u(r)) \geq 0$ for any $r > R$. Therefore

$$u'(r) \leq -|\frac{p}{p-1}F(u(r),0)|^{1/p}.$$

Separating the variables and integrating for $r > R$ we get:

$$\int_{u(r)}^{u(R)} |F(s,0)|^{-1/p} ds \geq \sqrt[p]{\frac{p-1}{p}} \int_R^r ds = \sqrt[p]{\frac{p-1}{p}}(r-R).$$

Since the right hand side of the previous inequality tends to $+\infty$ as $r \to \infty$ and the left hand side is finite we have found a contradiction. Therefore there is $R_1 > R$ such that $u(r) \equiv 0$ for $r \geq R_1$.

Now we prove claim B, so assume for contradiction that there is $R_1 > R$ for which $u(r) \equiv 0$ for $r > R_1$. We can find $R_0 > 0$ large enough so that $[Cu(s)^{q_1-1} + f(u(s),s)]u'(s) < 0$ for any $R_0 < r < R_1$. Integrating this inequality for $r > R_0$ and using (1.2) we get

$$|u'(r)|^p + \int_r^{R_1} u''(s)u'(s)|u'(s)|^{p-2} ds < \frac{C}{q_1}u(r)^{q_1} + (n-1)\int_r^{R_1} \frac{|u'(s)|^p}{s} ds$$

Hence

$$\frac{p-1}{p}|u'(r)|^p \leq \frac{C}{q_1}u(r)^{q_1} + \frac{n-1}{R_0}\int_r^{R_1} |u'(s)|^p ds$$

Setting $d = \frac{p(n-1)}{R_0(p-1)}$ and applying Gronwall inequality we obtain

$$|u'(r)|^p \leq \frac{C}{q_1}u(r)^{q_1}e^{d(R_1-r)} \leq Mu(r)^{q_1} \leq Mu(r)^p, \tag{5.1}$$

where $M = e^{d(R_1-R_0)}C/q_1$. Separating the variables and integrating in $[R_0, r]$ with $r < R_1$, we get:

$$\ln\left(\frac{u(R_0)}{u(r)}\right) = -\int_{u(R_0)}^{u(r)} \frac{ds}{s} \leq \int_{R_0}^{r} M^{1/p} dr = M^{1/p}(r - R_0)$$

Since the left hand side tends to infinity and the right hand side is bounded as $r \to R_1$, we have a contradiction. Thus $u(r) > 0$ for any $r > R$.

Observe that we can rewrite (1.2) as follows $(u'|u'|^{p-2}r^{n-1})' = -f(u,r)r^{n-1}$. Therefore $u'|u'|^{p-2}r^{n-1}$ is negative and increasing for r large. It follows that there is $\lim_{r\to\infty} - u'(r)r^{\frac{n-1}{p-1}} = \zeta \geq 0$. Applying De l'Hospital rule we obtain $\lim_{r\to\infty} u(r)r^{\frac{n-p}{p-1}} = \zeta\frac{p-1}{n-p} = \lambda \geq 0$. $\square$

Now we give a proof of Corollary 2.5. The proof of the last claim relies on some dynamical system ideas and the results, as far as we are aware, are new even for the prototypical case where f is as in (1.3) with $k_1 \equiv k_2 \equiv 1$.

Proof of Corollary 2.5. We begin from the first claim. Assume for contradiction that $\lambda = \zeta = 0$. Then, for any $\epsilon > 0$, we can choose r_0 large enough so that for $r > r_0$ we have $u(r)r^{\frac{n-p}{p-1}} < \epsilon$; hence

$$\begin{aligned} &- u'|u'|^{p-2}(r)r^{n-1} = -\int_r^\infty f(u,s)s^{n-1}ds < C\int_r^\infty u^{q_1-1}(s)s^{n-1}ds < \\ &< \epsilon^{q_1-1}\int_r^\infty s^{n-1-(q_1-1)\frac{n-p}{p-1}}ds \leq \epsilon_1 r^{-S_1}, \end{aligned} \tag{5.2}$$

where ϵ_1 is a small positive constants and $S_1 = \frac{q_1(n-p)-p(n-1)}{p-1}$; note that $S_1 > 0$ if and only if $q_1 > p_*$. Assume at first that $1 < p \leq 2$ and that $f(u,r)$ is uniformly continuous for r large, so that system (3.2) obtained setting $l = q_1$ is Lipschitz and uniformly continuous for t large. As usual we consider $l = q_1$ fixed in (3.1) and leave unsaid the subscript. Consider the solution $\mathbf{x}(t) = (x(t), y(t))$ corresponding to $u(r)$. Observe that $\mathbf{x}(t) \to (0,0)$ as $t \to +\infty$ and that $\gamma < 0$ since $q_1 > p_*$. Using invariant manifold theory for non-autonomous system it can be shown that, for any $\varepsilon > 0$, we have $\lim_{t\to\infty}|y(t)|\exp((-\gamma+\varepsilon)t) = +\infty$, see [17]. But, if we choose $\varepsilon < S_1$ and let $t \to \infty$ we have

$$|y(t)|e^{(-\gamma+\varepsilon)t} = |u'(r)|^{p-1}r^{n-1+\varepsilon} \leq Kr^{-S_1+\varepsilon} \to 0.$$

This is a contradiction and the claim is proved. If $p > 2$ we cannot rely anymore on invariant manifold theory.

However from (5.2) we find

$$u(r) = \int_\infty^r u'(s)ds \leq \epsilon_1^{\frac{1}{p-1}}\int_\infty^r s^{-\frac{n-1+S_1}{p-1}} = \frac{p-1}{n-p+S_1}\epsilon_2^{\frac{1}{q-1}}r^{-\frac{n-p+S_1}{p-1}}, \tag{5.3}$$

where $\epsilon_2 = \left(\frac{p-1}{n-p+S_1}\epsilon_1^{1/(p-1)}\right)^{q-1}$. Plugging (5.3) in (5.2) we find that for $r > r_0$ we have

$$|u'(r)|^{p-1}r^{n-1} < \epsilon_2 r^{-S_1 - S_1\frac{q_1-1}{p-1}} = \epsilon_2 r^{-S_2}.$$

Iterating the reasoning k times we find $u(r)^{q_1-1} < \epsilon_k r^{-S_k}$ where

$$S_k = S_{k-1}\left[1 + \frac{q_1-1}{p-1}\right] = \cdots = S_1[1 + (q_1-1)/(p-1)]^{k-1},$$
$$\epsilon_k = \left(\sqrt[p-1]{\epsilon_{k-1}}\frac{p-1}{n-p+S_{k-1}}\right)^{q-1} < (\epsilon_{k-1})^{\frac{q-1}{p-1}} < (\epsilon_1)^{(k-1)\frac{q-1}{p-1}}$$

Note that $\epsilon_k \to 0$ and $S_k \to \infty$ as $k \to \infty$. Hence we get

$$-g(x,t)e^{-\gamma t} \le C|\epsilon_k u(r)|^{q_1-1}r^{\alpha(q_1-1)-\gamma} \le r^{n-\frac{q-1}{p-1}(n-p+S_k)} = e^{-\bar{S}_k t},$$

where $\bar{S}_k = \frac{q-1}{p-1}(n-p+S_k) - n > 0$, if k is large enough. Now recall that $\dot{y}(t) = \gamma y(t) - g(x(t),t)$. Thus using the variation of constants formula for $t > t_0$ we get

$$|y(t)|e^{-\gamma t} = |y(t_0)|e^{-\gamma t_0} + \int_{t_0}^{t} e^{-\gamma s}g(x(s),s)ds \ge |y(t_0)|e^{-\gamma t_0} - \frac{e^{-\bar{S}_k t_0} - e^{-\bar{S}_k t}}{\bar{S}_k},$$

hence

$$|\zeta| = \lim_{r\to\infty}|u'(r)|^{p-1}r^{n-1} = \lim_{t\to\infty}|y(t)|e^{-\gamma t} \ge (|y(t_0)| - \frac{e^{(-\bar{S}_k+\gamma)t_0}}{\bar{S}_k})e^{-\gamma t_0}$$

Note that $|y(t_0)| - \frac{e^{(-\bar{S}_k+\gamma)t_0}}{\bar{S}_k} > 0$ if k is large enough; hence λ and ζ are positive, a contradiction.

Now we consider the second claim; we begin assuming that $n \le p$, so that $q_1 < p_* = \infty$. Assume for contradiction that $\zeta > 0$. We have seen that $\lim_{r\to\infty}u'(r)r^{\frac{n-1}{p-1}} = -\zeta$, so we can assume that $u'(r) > -2\zeta r^{\frac{1-n}{p-1}}$ for r large. Integrating between two values s and r large enough, we get

$$u(s) - u(r) > 2\zeta^{1/(p-1)}\int_s^r t^{\frac{1-n}{p-1}}dt.$$

Since the left hand side is finite as $r \to \infty$ and the right hand side tends to infinity we have $\zeta = 0$. Thus $\lambda = 0$ as well.

Now we consider the case $n > p$ and $q_1 \le Q_1 \le p_*$. We assume for contradiction $\lambda > 0$; observe that for r large we have

$$\infty > -\zeta - u'|u'|(r)^{p-2}r^{n-1} = -\int_r^\infty f(u,s)s^{n-1}ds > c\int_r^\infty s^{n-1}u^{Q_1-1}(s)ds >$$
$$> c\frac{\lambda^{Q_1-1}}{2}\int_r^\infty s^{n-1-(Q_1-1)\frac{n-p}{p-1}}ds$$

If $\lambda > 0$ the right hand side is divergent, therefore $\lambda = 0$.

Before proving the asymptotic estimate of claim 2 we analyze case 3 which is simpler. So consider system (3.2) where $l = Q_1$ where we have added the extra variable $z = e^t$ in order to deal with an autonomous system. Note that the ω-limit set of any bounded trajectory must be contained in the plane $z = 0$. The dynamics restricted to this plane is the one of system (3.5) where $-c = k(\infty) > 0$ and $\gamma_{Q_1} > 0$. Using Poincare-Bendixson criterion it can be shown that in this plane there are no periodic trajectories. Furthermore it admits three critical points: the origin, $\mathbf{P} = (P_x, P_y)$, where $P_x > 0 > P_y$ and $-\mathbf{P}$. From an elementary analysis of the phase portrait it can be easily shown that the origin is repulsive, even when the system is not Lipschitz. From a straightforward computation it follows that $\mathbf{P}$ is a saddle. Therefore bounded trajectories corresponding to positive solutions must have $\mathbf{P}$ as ω-limit set.

Consider a trajectory $\mathbf{x}(t)$ of the autonomous problem such that $y(t) < 0 < x(t)$ for t large; we claim that it is unbounded. From an elementary analysis of the phase portrait it follows that if $\mathbf{x}(t)$ is unbounded then there exists $T > 0$ large such that $\dot{x}(t)\dot{y}(t) > 0$ for any $t > T$. Thus either $\lim_{t\to\infty} x(t) = +\infty$ and the limit $\lim_{t\to\infty} y(t)$ is finite and nonpositive, or $\lim_{t\to\infty} y(t) = -\infty$ and the limit $\lim_{t\to\infty} x(t)$ is finite and nonnegative. Using a continuity argument we arrive to the same conclusion for system (3.2). Note that from De l'Hospital rule we find

$$\lim_{t\to\infty} x(t) = \lim_{r\to\infty} \frac{u(r)}{r^{-\alpha}} = -\lim_{r\to\infty} \frac{u'(r)}{\alpha r^{-\alpha-1}} = \lim_{t\to\infty} \frac{|y(t)|^{1/(p-1)}}{\alpha} \tag{5.4}$$

Therefore $y(t)$ is bounded if and only if $x(t)$ is bounded. Hence system (3.2) admits no unbounded trajectories in the subset $\{(x, y) \,|\, y < 0 < x\}$. Therefore $\mathbf{x}(t)$ must have $\mathbf{P}$ as ω-limit set. Then it follows that a solution $u(r)$ of (1.2) which is positive and decreasing is such that $\lim_{r\to\infty} u(r) r^{\frac{p}{Q_1-p}} = P_x > 0$.

Now assume $Q_1 = p_*$ and consider system (3.2) where $l = Q_1$; then $\gamma = 0$ and $\dot{y} = -g(x, t) < 0$, for t large and x small. From Proposition 2.4 it follows that $\lim_{t\to\infty} \mathbf{x}(t) = (\lambda, -|\zeta|^{p-1}) = (0, 0)$. From an elementary analysis of the phase portrait it follows that $\dot{x}(t) < 0$ for t large, hence $\alpha x < |y|^{1/(p-1)}$; thus $\dot{y} > \bar{M}_1(-y)^{(Q_1-1)/(p-1)}$, where $\bar{M}_1 > 0$ is a constant. Separating the variables and integrating we find that there is a constant $M_1 > 0$ such that

$$|y(t)| < (1 + M_1 t)^{-\frac{p-1}{Q_1-p}} = (1 + M_1 t)^{-\frac{n-p}{p}}$$

Therefore there exists $K > 0$ such that $x(t) < |\sqrt[p-1]{|y(t)|}|/\alpha < K t^{-\frac{n-p}{p(p-1)}}$ for t large, hence

$$\limsup_{r\to\infty} \; u(r) r^{\frac{n-p}{p-1}} |\ln(r)|^{\frac{n-p}{p(p-1)}} < \infty. \tag{5.5}$$

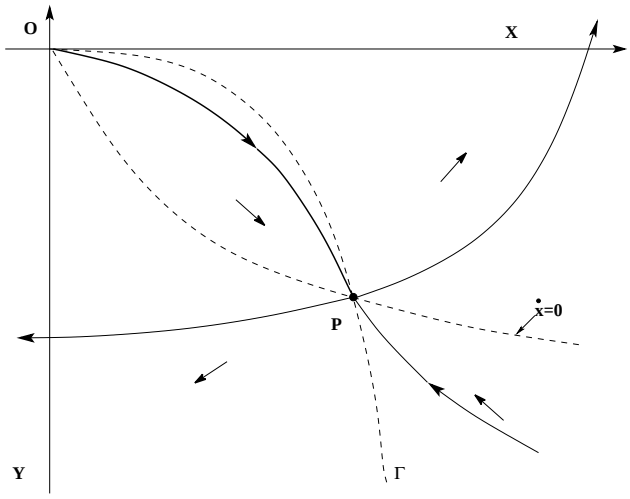

Figure 5: A sketch of the phase portrait for the autonomous system (3.5) when $p < q < p_*$ in the case $C < 0$.

Observe now that if t is large enough we can find $\bar{M}_2 > 0$ such that

$$\dot{y} < \bar{M}_2 x^{(Q_1-1)} < M_2(-y)^{(Q_1-1)/(p-1)}$$

Reasoning as above we conclude that

$$\liminf_{r\to\infty} \; u(r) r^{\frac{n-p}{p-1}} |\ln(r)|^{\frac{n-p}{p(p-1)}} > 0.$$

Now we consider claim 2, so we consider system (3.2) with $l = Q_1$. Consider the solution $\bar{x}(t)$ corresponding to the positive and decreasing solution $u(r)$; we want to prove that $x(t)$ is bounded as $t \to \infty$. Assume for contradiction that $x(t)$ is unbounded. Note that $-g(x(t), t) > c|x(t)|^{Q_1-1}$for t large enough. From an elementary analysis of the phase portrait it follows that there exists $T > 0$ such that $\dot{y}(t), \dot{x}(t)$ are positive for any $t > T$. It follows that the limit $\lim_{t\to\infty} y(t)$ exists and is finite. Then from (5.4) it follows that $\lim_{t\to\infty} x(t) < \infty$ as well; a contradiction. Therefore $x(t)$ is bounded and the claim is proved. Note that when $q = p_*$ we can repeat the first part of the argument developed for claim 3 and prove (5.5). This concludes the proof of the Corollary. □

Appendix B: reduction of $\operatorname{div}(h(|x|)\nabla u|\nabla u|^{p-2}) + f(u, |x|) = 0.$

In this subsection we want to show how we can pass from the analysis of radial solutions of an equation of the following class

$$\operatorname{div}(h(|x|)\nabla u|\nabla u|^{p-2}) + \bar{f}(u, |x|) = 0 \tag{5.6}$$

to the analysis of solutions of an equation of the form (1.2). Here again $x \in \mathbb{R}^n$ and $h(|x|) \geq 0$ for $|x| \geq 0$.

We exploit here an idea already used in [19] and [13], and we follow quite closely the latter paper, in which the concept of natural dimension is introduced. First of all observe that a radial solutions $u(r)$ of (5.6) satisfy the following ODE:

$$(h(r)u'|u'|^{p-2})' + \frac{n-1}{r}u'|u'|^{p-2} + \bar{f}(u,r) = 0. \tag{5.7}$$

Then we rewrite (5.7) as follows

$$(r^{n-1}h(r)u'|u'|^{p-2})' + r^{n-1}\bar{f}(u,r) = 0. \tag{5.8}$$

Let us set $a(r) = r^{n-1}h(r)$; we assume that one of the Hypotheses below is satisfied

H1 $a^{-1/(p-1)} \in L^1[1,\infty] \setminus L^1[0,1]$

H2 $a^{-1/(p-1)} \in L^1[0,1] \setminus L^1[1,\infty)$

We introduce now the following change of variables borrowed from [13]. Let $N > p$ be a constant and assume that Hyp. H1 is satisfied; we define

$$s(r) = \left(\int_r^\infty a(\tau)^{-1/(p-1)} d\tau\right)^{\frac{-p+1}{N-p}}$$

Obviously $s : \mathbb{R}_0^+ \to \mathbb{R}_0^+$, $s(0) = 0$, $s(\infty) = \infty$ and $s(r)$ is a diffeomorphism of $\mathbb{R}_0^+$ into itself with inverse $r = r(s)$ for $s \geq 0$. If $u(r)$ is a solution of (5.8), $v(s) = u(r(s))$ is a solution of the following transformed equation

$$(s^{N-1}v_s|v_s|^{p-2})_s + s^{N-1}h(s)f(v,s) = 0, \tag{5.9}$$

where $f(v,s) = \bar{f}(v, r(s))$

$$\psi(s) = \left(\frac{N-p}{p-1}\right)^p \left(\frac{h(r(s))^{1/p} r(s)^{n-1}}{s^{N-1}}\right)^{p/(p-1)}.$$

If we replace Hyp. H1 by Hyp. H2 we can define $s(r)$ as follows

$$s(r) = \left(\int_0^r a(\tau)^{-1/(p-1)} d\tau\right)^{\frac{p-1}{N-p}}$$

and obtain again (5.9) from (5.8), with the same expression for h. We denote by $f(v,s) = h(s)\bar{f}(v, r(s))$ and obtain (1.2) from (5.9), with r replaced by s.

5.1 Remark. Note that, if for any fixed $v > 0$, $\bar{f}(v,r)$ grows like either a positive or a negative power in r for r small, we can play with the parameter N in order to have that, for any fixed $u > 0$, $f(u,0)$ is positive and bounded. E.g., if $h(r) \equiv 1$ and $\bar{f}(u,r) = r^l u|u|^{q-1}$, we can set $N = \frac{p(n+l)-n}{p+l-1}$, so that, switching from r to s as independent variable we get

$$[s^{N-1}v_s|v_s|^{p-2}]_s + Cs^{N-1}v|v|^{q-1} = 0 \tag{5.10}$$

where $C = \left|\frac{N-p}{p-1}\right|^p \left|\frac{p-1}{N-1}\right|^{\frac{n-1}{N-p}p} > 0$. So we can directly study the spatial independent equation (5.10), recalling that the natural dimension is N and this changes the values of the critical exponents and the asymptotic behaviors of positive solutions as $r \to 0$ and as $r \to \infty$.

Observe that N does not need to be an integer and that in literature such an assumption is not really used to prove the results. Thus all the theorems obtained for (1.2) can be trivially extended to an equation of the form (5.7), where g satisfies either H1 or H2.

References

[1] F. Battelli, R. Johnson, Singular ground states of the scalar curvature equation in $\mathbb{R}^n$, Diff. Int. Eqns. 14 (2000) 123-139.

[2] E. Calzolari, R. Filippucci and P. Pucci, Existence of radial solutions for the p-Laplacian elliptic equations with weights, Discrete Contin. Dyn. Syst. 15 (2006), no. 2, 447-479.

[3] G.Citti, F. Uguzzoni, Positive solutions of $-\Delta_p u + u^{p-2} - q(x)u^\alpha = 0$, Nonlinear Differential Equations Appl. 9 (2002) 1-14.

[4] L. Damascelli, F. Pacella, M. Ramaswamy, Symmetry of ground states of p-Laplace equations via the Moving Plane Method, Arch. Rat. Mech. Anal. 148 (1999) 291-308.

[5] I. Flores, A resonance phenomenon for ground states of an elliptic equation of Edmen-Fowler type, Journ. diff. eq. 198 (2004) 1-15.

[6] R. Bamon, I. Flores, M. Del Pino, Ground states of semilinear elliptic equations: a geometrical approach, Ann. Inst. Poincare 17 (2000) 551-581.

[7] M. Franca, Classification of positive solution of p-Laplace equation with a growth term, Archivum Mathematicum (Brno) 40 No 4 (2004) 415-434.

[8] M. Franca , Some results on the m-Laplace equations with two growth terms, J. Dyn. Diff. Eq. 17 (2005) 391-425

[9] M. Franca, R. Johnson, Ground states and singular ground states for quasilinear partial differential equations with critical exponent in the perturbative case, Adv. Nonlinear Studies 4 (2004) 93-120.

[10] M. Franca, Quasilinear elliptic equations and Wazewski's principle, Top. Meth. Nonlinear Analysis 23 No.2 (2004) 213-238.

[11] M. Franca, Ground states and singular ground states for quasilinear elliptic equation in the subcritical case, Funkcial. Ekvac. 48 (2005), 331-349.

[12] B. Franchi, E. Lanconelli, J. Serrin, Existence and uniqueness of nonnegative solutions of quasilinear equations in $\mathbb{R}^n$, Adv. in Math. 118 (1996) 177-243.

[13] M. Garcia-Huidobro, R. Manasevich, P. Pucci, J. Serrin, Qualitative properties of ground states for singular elliptic equations with weights, Ann. Mat. Pura Appl. 185 (2006), suppl., S205-S243.

[14] F. Gazzola, J. Serrin, M. Tang, Existence of ground states and free boundary problem for quasilinear elliptic operators, Adv. Diff. Eq. 5 (2000) 1-30.

[15] B. Gidas , W. M. Ni, L. Nirenberg, Symmetry of positive solutions of nonlinear elliptic equations in $\mathbb{R}^n$, Adv. Math. Supp. Stud. 7A (1981) 369-403.

[16] R. Johnson, X. B. Pan, Y. F. Yi, Singular ground states of semilinear elliptic equations via invariant manifold theory, Nonlinear Analysis, Th. Meth. Appl. 20 (1993) 1279-1302.

[17] R. Johnson, Concerning a theorem of Sell, J. Diff. Eqns 30 (1978) 324-339.

[18] R. Johnson, X. B. Pan, Y. F. Yi, The Melnikov method and elliptic equation with critical exponent, Indiana Math. J. 43 (1994) 1045-1077.

[19] Y. Kabeya, E. Yanagida, S. Yotsutani, Canonical forms and structure theorems for radial solutions to semi-linear elliptic problem, Comm. Pure Appl. An. 1 (2002) 85-102.

[20] D. Papini and F. Zanolin, Periodic points and chaotic-like dynamics of planar maps associated to nonlinear Hill's equations with indefinite weight, Georgian Math. J. 9 (2002), no. 2, 339-366.

[21] P. Pucci, J. Serrin, Uniqueness of ground states for quasilinear elliptic operators, Indiana Univ. Math. J. 47 (1998) 501-528.

[22] J. Serrin, H. Zou, Symmetry of ground states of quasilinear elliptic equations, Arch Rat Mech. Anal. 148 (1985) 265-290.